Licross®

Seilabhänger für Seil ø1.5mm
wire suspension for rope ø1.5mm

59TR9RA
59TR9RQ . 0

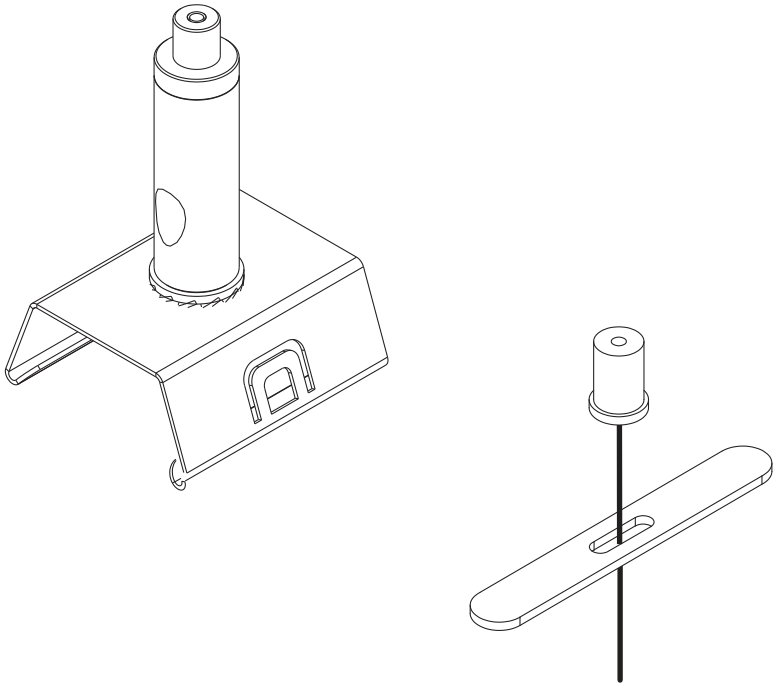

siteco

51TL…

IP40

A

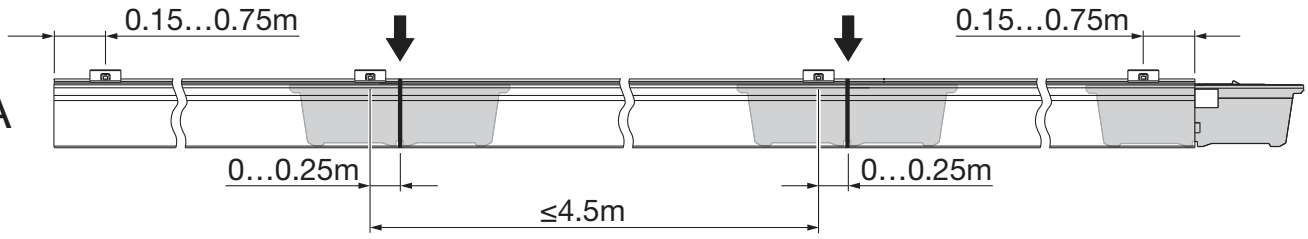

B

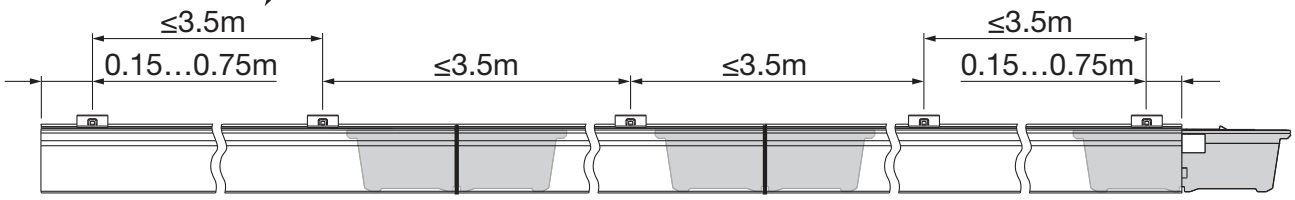

51TP…
51TS…

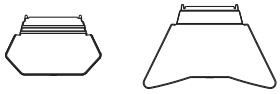

IP50 **IP64**

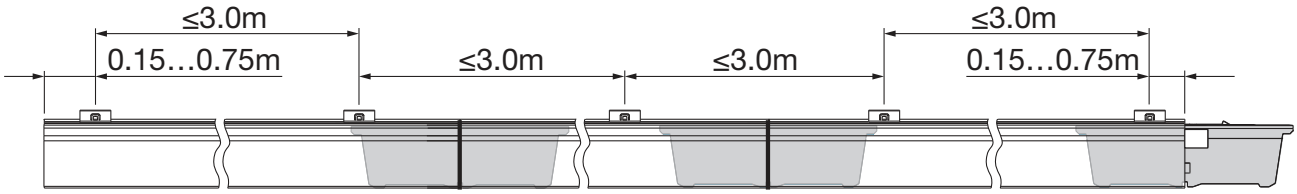

siteco

1 59TR9RA

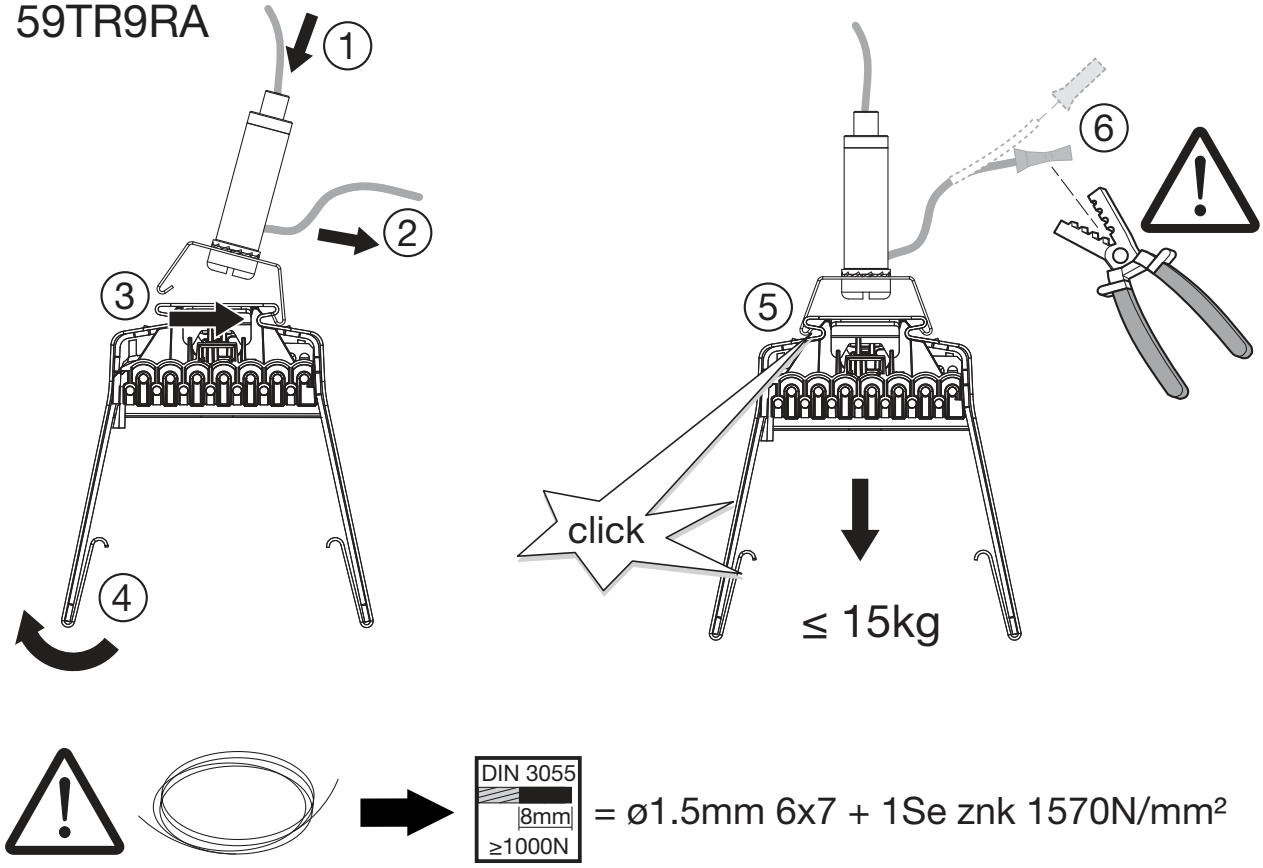

2 59TR9RA

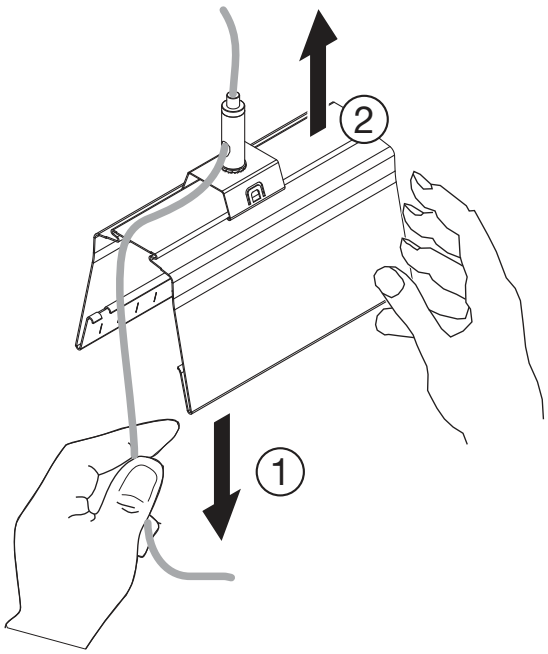

2.1 59TR9RA

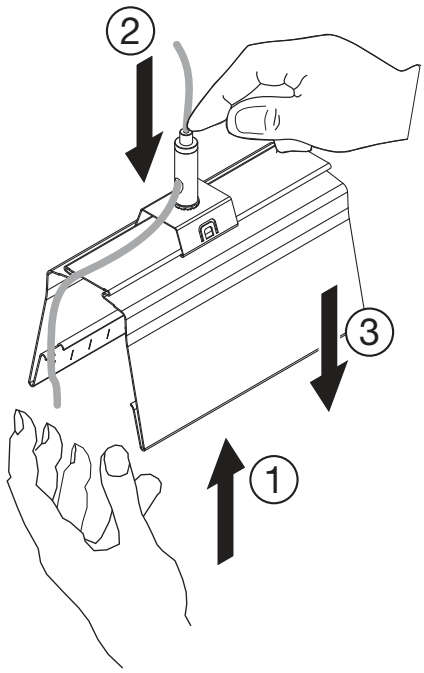

siteco

3 59TR9RA

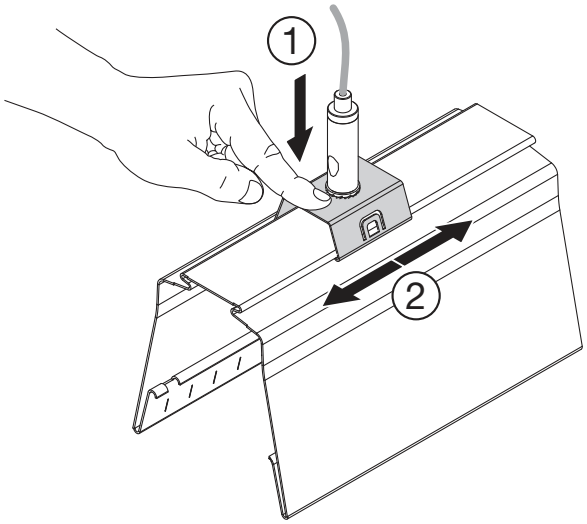

3.1 59TR9RA

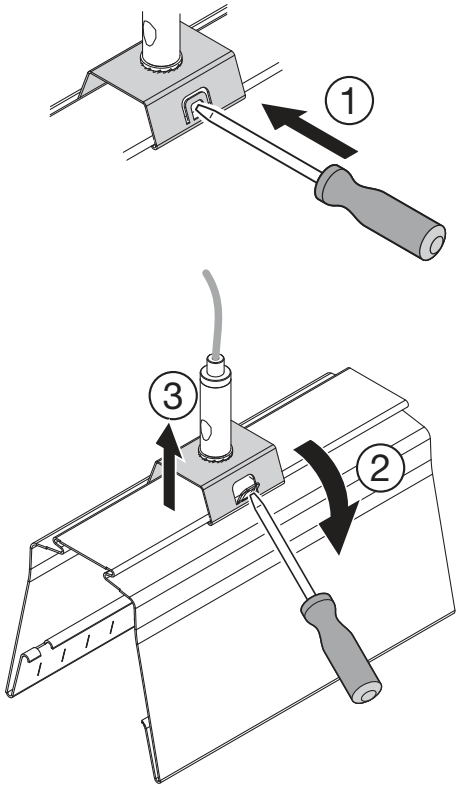

1 59TR9RQ . 0

[mm]

		L
59TR9RQ30	10x	3000
59TR9RQ50	10x	5000

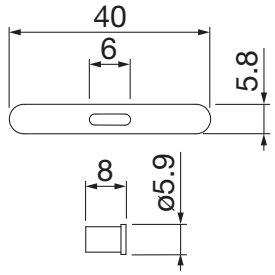

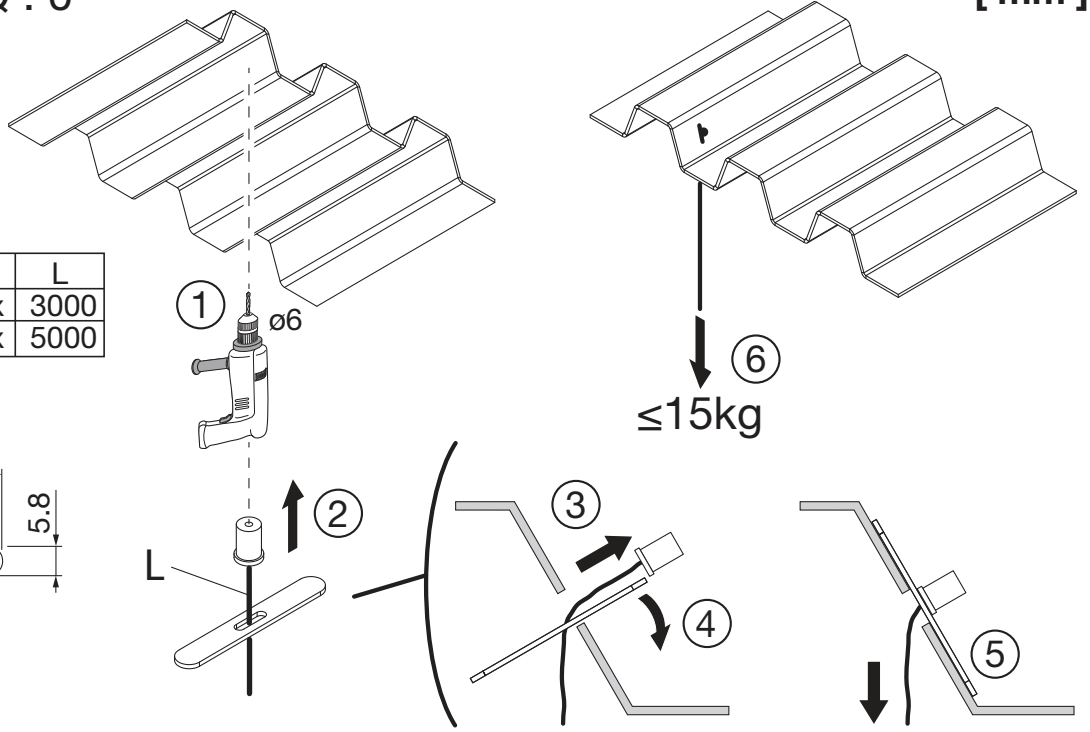

Siteco GmbH
Georg-Simon-Ohm-Straße 50
83301 Traunreut, Germany
mail: technicalsupport@siteco.de
Phone: +49 8669 / 33-844
www.siteco.com

5MA14-256760_ad
20.08.2024 / AZ