siteco

Order No.: 51WD107BG2A | **GTIN (EAN):** 4058352520963

Product description: Rond41M,2300lm830/840,0/1,PMMA,wh

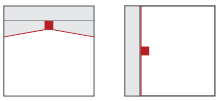

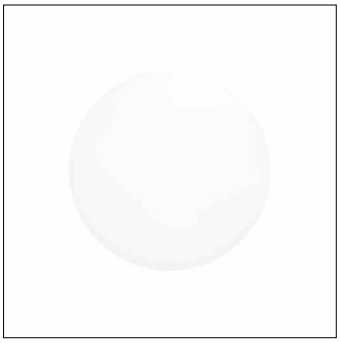

Rondel 41-M, wall and ceiling luminaire, primary optical cover: enclosure, of PMMA, opal, light emission: direct distribution, primary light characteristic: symmetric, installation type: surface-mounted, LED, rated luminous flux: 2.300lm, luminous efficacy: 105lm/W, light colour: 830/840, colour temperature: 3000/4000K, control gear: ON/OFF, with terminal, 3-pole, max. 2.5mm², mains connection: 230V, AC, 50/60Hz, rated input power: 21W, luminaire housing, round, of steel, powder-coated, white, diameter: 330mm, height: 110mm, protection rating (complete): IP44, insulation class (complete): insulation class I (protective earthing), certification: CE, impact resistance: IK02, permissible operating ambient temperature: -30..+40°C, permissible storage temperature: -30..+80°C, packaging unit: 1 piece

IP 44

Lamps:	LED
Wt. (kg):	0.7
GTIN (EAN):	4058352520963

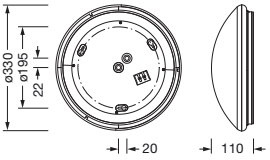

It is mandatory that the assembly instructions must be observed when planning and installing the electrical installation (to be found at www.siteco.de)
Tolerances related to thermal, electrical and photometric data according to IEC 62722
Issued 27.09.2024 - Modifications and errors subject to change - Ensure that you always use the latest version -

Siteco GmbH • Georg-Simon-Ohm-Str. 50 • 83301 Traunreut, Germany • Tel +49(8669)33-0 • Fax +49(8669)33-397 • eMail info@siteco.de • Internet www.siteco.com

siteco

Order No.: 51WD107BG2A | **GTIN (EAN):** 4058352520963

Detailed technical description: Rond41M,2300lm830/840,0/1,PMMA,wh

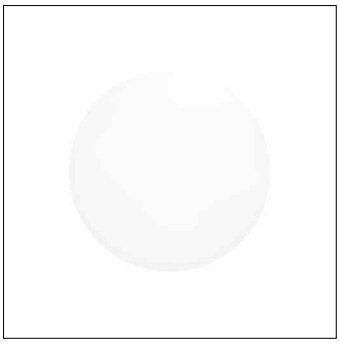

Key data
- Product type: wall and ceiling luminaire
- Product name: Rondel 41-M
- Order No.: 51WD107BG2A

Lighting technology | Lamps | Control gear

Component 1

Lighting technology:
- Cover: enclosure, opal
- Beam angle: diffuse distribution
- Symmetry: symmetric
- Light emission: direct distribution

Lamps:
- Lamps: with LED
- Rated luminous flux: 2300lm
- Luminous efficacy: 105lm/W
- Colour temperature: 3000/4000K
- Colour rendering index: CRI > 80
- Light colour: 830/840
- SDCM (Standard Deviation of Colour Matching): MacAdam ≤ 5 SDCM (initial)
- Rated input power: 21W
- Supplement: colour temperature can be selected via DIP switch

Operating device:
- Control gear: ECG
- Control: ON/OFF

Certificates, Standards
- Protection rating: IP44
- Insulation class: insulation class I (protective earthing)
- Impact resistance: IK02
- Temperature range (operation): -30..+40°C
- Certification, designation: CE

Material, Colour
- luminaire housing: steel, powder-coated, white, round
- Colour specification: white
- Cover: enclosure of PMMA

Mounting
- Mounting method, mounting location: surface-mounted, to the ceiling, to the wall
- Arrangement: single arrangement

Electrical connection
- Connection: terminal, 3-pole, max. 2.5mm²
- Nominal voltage: 230V, 220..240V, 50/60Hz, AC

Dimensions, Weight
- Diameter: 330mm
- Height: 110mm
- Weight: 0.7kg

Service life
- Rated service life: 50000h (L80/B10) at AT = 25°C

It is mandatory that the assembly instructions must be observed when planning and installing the electrical installation (to be found at www.siteco.de)
Tolerances related to thermal, electrical and photometric data according to IEC 62722
Issued 27.09.2024 - Modifications and errors subject to change - Ensure that you always use the latest version -

Siteco GmbH • Georg-Simon-Ohm-Str. 50 • 83301 Traunreut, Germany • Tel +49(8669)33-0 • Fax +49(8669)33-397 • eMail info@siteco.de • Internet www.siteco.com

siteco

Order No.: 51WD107BG2A | **GTIN (EAN):** 4058352520963

Dimensions: Rond41M,2300lm830/840,0/1,PMMA,wh

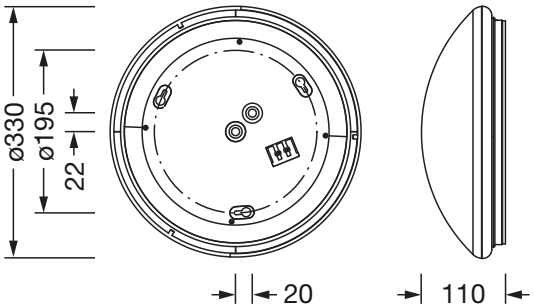

It is mandatory that the assembly instructions must be observed when planning and installing the electrical installation (to be found at www.siteco.de)
Tolerances related to thermal, electrical and photometric data according to IEC 62722
Issued 27.09.2024 - Modifications and errors subject to change - Ensure that you always use the latest version -

Siteco GmbH • Georg-Simon-Ohm-Str. 50 • 83301 Traunreut, Germany • Tel +49(8669)33-0 • Fax +49(8669)33-397 • eMail info@siteco.de • Internet www.siteco.com