siteco

Order No.: 58FM002 | **GTIN (EAN):** 4058352410257

Product description: Mon11/21-ceil/wall-fast

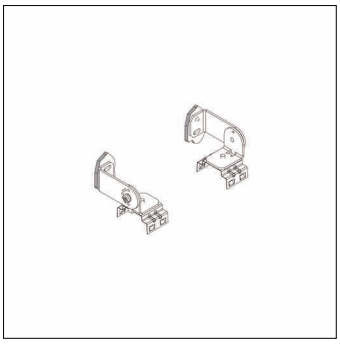

Monsun® 11/21, wall fastening, inclinable, installation type: horizontal mounting, wall mounting set, of stainless steel (V2A), consisting of each 2x fixing bracket on wall and luminaire side, cylinder head screw, mounting clip for luminaire, all parts of V2A/V4A and 2x fixing reinforcement of UV stabilised PC, packaging unit: set of 2

Wt. (kg):	0.2
GTIN (EAN):	4058352410257

It is mandatory that the assembly instructions must be observed when planning and installing the electrical installation (to be found at www.siteco.de)
Tolerances related to thermal, electrical and photometric data according to IEC 62722
Issued 06.06.2024 - Modifications and errors subject to change - Ensure that you always use the latest version -

Siteco GmbH • Georg-Simon-Ohm-Str. 50 • 83301 Traunreut, Germany • Tel +49(8669)33-0 • Fax +49(8669)33-397 • eMail info@siteco.de • Internet www.siteco.com

siteco

Order No.: 58FM002 | **GTIN (EAN):** 4058352410257

Detailed technical description: Mon11/21-ceil/wall-fast

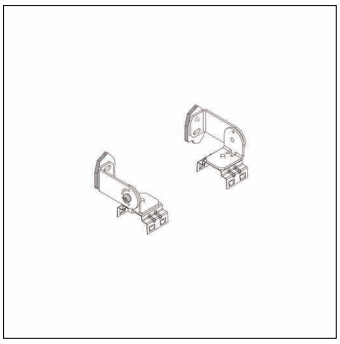

Key data
- Product type: wall fastening, inclinable
- Product name: Monsun® 11/21
- Order No.: 58FM002

Material, Colour
- wall mounting set: stainless steel (V2A), consisting of each 2x fixing bracket on wall and luminaire side, cylinder head screw, mounting clip for luminaire, all parts of V2A/V4A and 2x fixing reinforcement of UV stabilised PC

Mounting
- Mounting method, mounting location: horizontal mounting, to the wall

Dimensions, Weight
- Weight: 0.2kg

It is mandatory that the assembly instructions must be observed when planning and installing the electrical installation (to be found at www.siteco.de)
Tolerances related to thermal, electrical and photometric data according to IEC 62722
Issued 06.06.2024 - Modifications and errors subject to change - Ensure that you always use the latest version -

Siteco GmbH • Georg-Simon-Ohm-Str. 50 • 83301 Traunreut, Germany • Tel +49(8669)33-0 • Fax +49(8669)33-397 • eMail info@siteco.de • Internet www.siteco.com