siteco

**Order No.:** 51WD107BG2AS | **GTIN (EAN):** 4058352520970

**Product description:** Rond41M,2300lm830/840,0/1,PMMA,sens,wh

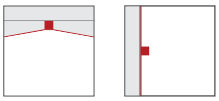

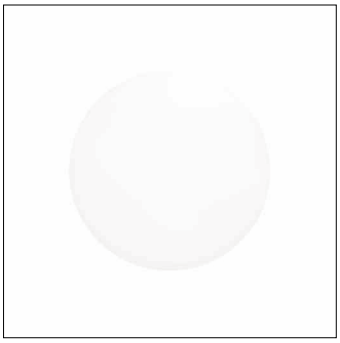

Rondel 41-M, wall and ceiling luminaire, primary optical cover: enclosure, of PMMA, opal, light emission: direct distribution, primary light characteristic: symmetric, installation type: surface-mounted, LED, rated luminous flux: 2.300lm, luminous efficacy: 100lm/W, light colour: 830/840, colour temperature: 3000/4000K, control gear: ON/OFF, with terminal, 3-pole, max. 2.5mm², mains connection: 230V, AC, 50/60Hz, rated input power: 22W, luminaire housing, round, of steel, powder-coated, white, diameter: 330mm, height: 110mm, brightness and presence sensor, HF sensor, protection rating (complete): IP44, insulation class (complete): insulation class I (protective earthing), certification: CE, impact resistance: IK02, permissible operating ambient temperature: -20..+40°C, permissible storage temperature: -30..+80°C, packaging unit: 1 piece

IP 44

| | |
|---|---|
| Lamps: | LED |
| Wt. (kg): | 0.8 |
| GTIN (EAN): | 4058352520970 |

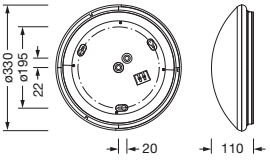


It is mandatory that the assembly instructions must be observed when planning and installing the electrical installation (to be found at www.siteco.de)
Tolerances related to thermal, electrical and photometric data according to IEC 62722
Issued 27.09.2024 - Modifications and errors subject to change - Ensure that you always use the latest version -

Siteco GmbH • Georg-Simon-Ohm-Str. 50 • 83301 Traunreut, Germany • Tel +49(8669)33-0 • Fax +49(8669)33-397 • eMail info@siteco.de • Internet www.siteco.com

siteco

**Order No.:** 51WD107BG2AS | **GTIN (EAN):** 4058352520970

**Detailed technical description:** Rond41M,2300lm830/840,0/1,PMMA,sens,wh

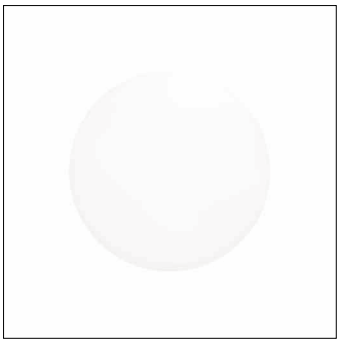

**Key data**
- Product type: wall and ceiling luminaire
- Product name: Rondel 41-M
- Order No.: 51WD107BG2AS

**Lighting technology | Lamps | Control gear**

**Component 1**

**Lighting technology:**
- Cover: enclosure, opal
- Beam angle: diffuse distribution
- Symmetry: symmetric
- Light emission: direct distribution

**Lamps:**
- Lamps: with LED
- Rated luminous flux: 2300lm
- Luminous efficacy: 100lm/W
- Colour temperature: 3000/4000K
- Colour rendering index: CRI > 80
- Light colour: 830/840
- SDCM (Standard Deviation of Colour Matching): MacAdam ≤ 5 SDCM (initial)
- Rated input power: 22W
- Supplement: colour temperature can be selected via DIP switch

**Operating device:**
- Control gear: ECG
- Control: ON/OFF

**Certificates, Standards**
- Protection rating: IP44
- Insulation class: insulation class I (protective earthing)
- Impact resistance: IK02
- Temperature range (operation): -20..+40°C
- Certification, designation: CE

**Material, Colour**
- luminaire housing: steel, powder-coated, white, round
- Colour specification: white
- Cover: enclosure of PMMA

**Mounting**
- Mounting method, mounting location: surface-mounted, to the ceiling, to the wall
- Arrangement: single arrangement

**Electrical connection**
- Connection: terminal, 3-pole, max. 2.5mm²
- Nominal voltage: 230V, 220..240V, 50/60Hz, AC

**Dimensions, Weight**
- Diameter: 330mm
- Height: 110mm
- Weight: 0.8kg

**Service life**
- Rated service life: 50000h (L80/B10) at AT = 25°C

It is mandatory that the assembly instructions must be observed when planning and installing the electrical installation (to be found at www.siteco.de)
Tolerances related to thermal, electrical and photometric data according to IEC 62722
Issued 27.09.2024 - Modifications and errors subject to change - Ensure that you always use the latest version -

Siteco GmbH • Georg-Simon-Ohm-Str. 50 • 83301 Traunreut, Germany • Tel +49(8669)33-0 • Fax +49(8669)33-397 • eMail info@siteco.de • Internet www.siteco.com

siteco

**Order No.:** 51WD107BG2AS | **GTIN (EAN):** 4058352520970

**Dimensions:** Rond41M,2300lm830/840,0/1,PMMA,sens,wh

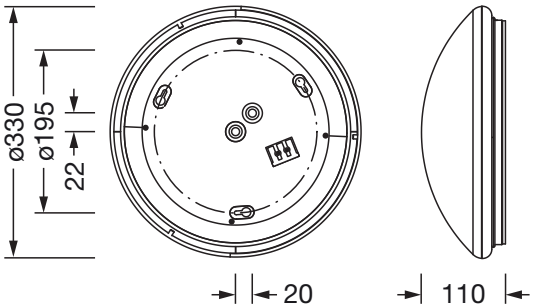





Siteco GmbH • Georg-Simon-Ohm-Str. 50 • 83301 Traunreut, Germany • Tel +49(8669)33-0 • Fax +49(8669)33-397 • eMail info@siteco.de • Internet www.siteco.com