siteco

Order No.: 51HC42DA4FMB | **GTIN (EAN):** 4058352700259

Product description: HB31S,rot.sym,90°,14000lm840,DA2

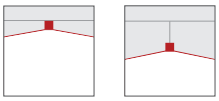

Highbay 31-S, LED high bay luminaire, primary light control with lens, of PC, primary optical cover: cover panel, of PC, transparent, light emission: direct distribution, primary light characteristic: rotationally symmetric, installation type: suspended mounting, surface-mounted, LED, rated luminous flux: 14.000lm, luminous efficacy: 150lm/W, light colour: 840, colour temperature: 4000K, control gear: DALI 2, with cable, 5x 1.0mm², free wire ends, mains connection: 220..240V, AC/DC, 0/50..60Hz, cable length: 1,5m, rated input power: 94W, housing, rotationally symmetric, of diecast aluminium, powder-coated, grey aluminium (RAL 9007), with hook on luminaire side, incl. screw, diameter: 339mm, protection rating (complete): IP65, insulation class (complete): insulation class I (protective earthing), certification: CE, ENEC, UKCA, protection symbol: D, impact resistance: IK08, permissible operating ambient temperature: -30..+45°C, standard: EN 60598-2-22, EN 60598, corresponds to IFS (International Featured Standards) requirements for safety and quality in the food industry, packaging unit: 1 piece

IP 65 IK 08

Lamps:	LED
Wt. (kg):	2.9
GTIN (EAN):	4058352700259

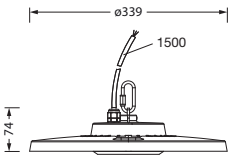

It is mandatory that the assembly instructions must be observed when planning and installing the electrical installation (to be found at www.siteco.de)
Tolerances related to thermal, electrical and photometric data according to IEC 62722
Issued 27.09.2024 - Modifications and errors subject to change - Ensure that you always use the latest version -

Siteco GmbH • Georg-Simon-Ohm-Str. 50 • 83301 Traunreut, Germany • Tel +49(8669)33-0 • Fax +49(8669)33-397 • eMail info@siteco.de • Internet www.siteco.com

siteco

Order No.: 51HC42DA4FMB | **GTIN (EAN):** 4058352700259

Detailed technical description: HB31S,rot.sym,90°,14000lm840,DA2

Key data
- Product type: LED high bay luminaire
- Product name: Highbay 31-S
- Order No.: 51HC42DA4FMB

Lighting technology | Lamps | Control gear

Component 1

Lighting technology:
- Light control: lens of PC
- Cover: cover panel, transparent
- Beam angle: 90°
- Symmetry: rotationally symmetric
- Light emission: direct distribution
- UGR viewing direction along longitudinal luminaire axis: ≤ 25
- UGR viewing direction along lateral luminaire axis: ≤ 25

Lamps:
- Lamps: with LED
- Rated luminous flux: 14000lm
- Luminous efficacy: 150lm/W
- Colour temperature: 4000K
- Colour rendering index: CRI > 80
- Light colour: 840
- SDCM (Standard Deviation of Colour Matching): MacAdam ≤ 4 SDCM (initial)
- Rated input power: 94W
- Supplement: for emergency light function, for central battery installations according to DIN EN 60598-2-22, without flicker

Operating device:
- Control gear: ECG DALI
- Control: DALI 2

Certificates, Standards
- Protection rating: IP65
- Insulation class: insulation class I (protective earthing)
- Impact resistance: IK08
- Protection symbol: D
- Temperature range (operation): -30..+45°C
- Supplement: corresponds to IFS (International Featured Standards) requirements for safety and quality in the food industry
- Standard: EN 60598, EN 60598-2-22
- Certification, designation: CE, ENEC, UKCA

Material, Colour
- housing: diecast aluminium, powder-coated, grey aluminium (RAL 9007), rotationally symmetric, with hook on luminaire side, incl. screw
- Quantity: 1 piece
- Colour specification: grey aluminium (RAL 9007)
- Cover: cover panel of PC

Mounting
- Mounting method, mounting location: suspended mounting, surface-mounted, to the ceiling, to the chain
- Arrangement: single arrangement
- Supplement: only suitable for indoor use, mounting accessories required, please order separately

Electrical connection
- Connection: cable, 5x 1.0mm², free wire ends
- Nominal voltage: 220..240V, 0/50..60Hz, AC/DC

Dimensions, Weight
- Diameter: 339mm
- Weight: 2.9kg

Service life
- Rated service life: 100000h (L70/B50) at AT = 35°C, 70000h (L80/B50) at AT = 45°C, 50000h (L85/B50) at AT = 45°C

It is mandatory that the assembly instructions must be observed when planning and installing the electrical installation (to be found at www.siteco.de)
Tolerances related to thermal, electrical and photometric data according to IEC 62722
Issued 27.09.2024 - Modifications and errors subject to change - Ensure that you always use the latest version -

Siteco GmbH • Georg-Simon-Ohm-Str. 50 • 83301 Traunreut, Germany • Tel +49(8669)33-0 • Fax +49(8669)33-397 • eMail info@siteco.de • Internet www.siteco.com

Order No.: 51HC42DA4FMB | **GTIN (EAN):** 4058352700259

Dimensions: HB31S,rot.sym,90°,14000lm840,DA2

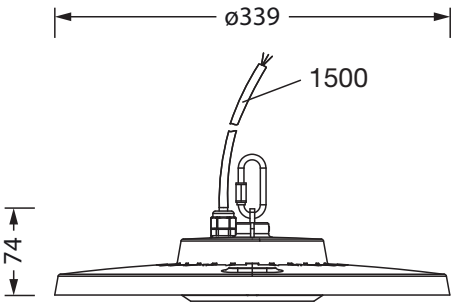

Siteco GmbH • Georg-Simon-Ohm-Str. 50 • 83301 Traunreut, Germany • Tel +49(8669)33-0 • Fax +49(8669)33-397 • eMail info@siteco.de • Internet www.siteco.com