siteco

Order No.: 5XA7102W01000 | **GTIN (EAN):** 4058352349014

Product description: Sirius,ECG-unit,DA,p-red,IC1

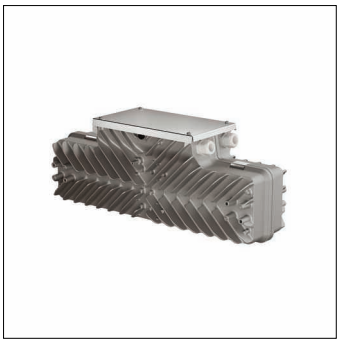

Sirius®, ECG unit, 3/4-pole (3/4G) + 1-pole (LST) / 2-pole (DALI), max. 2.5mm², control gear: ECG, with terminal, mains connection: 220..240V/380..415V, AC, 50/60Hz, with system connector or terminal, ECG unit, of diecast aluminium, powder-coated, Siteco® metallic grey (DB 702S), length: 635mm, width: 181mm, height: 247mm, protection rating (complete): IP66, insulation class (complete): insulation class I (protective earthing), certification: CE, ENEC, packaging unit: 1 piece

IP 66

Wt. (kg):	10.0
GTIN (EAN):	4058352349014

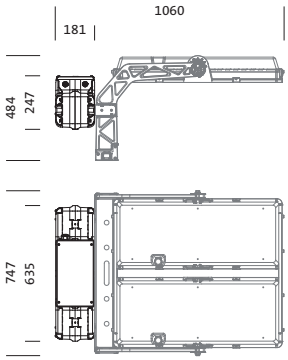

It is mandatory that the assembly instructions must be observed when planning and installing the electrical installation (to be found at www.siteco.com)
Tolerances related to thermal, electrical and photometric data according to IEC 62722
Issued 24.02.2023 - Modifications and errors subject to change - Ensure that you always use the latest version -

Siteco GmbH • Georg-Simon-Ohm-Str. 50 • 83301 Traunreut, Germany • Tel +49(8669)33-0 • Fax +49(8669)33-397 • eMail info@siteco.de • Internet www.siteco.com

siteco

Order No.: 5XA7102W01000 | **GTIN (EAN):** 4058352349014

Detailed technical description: Sirius,ECG-unit,DA,p-red,IC1

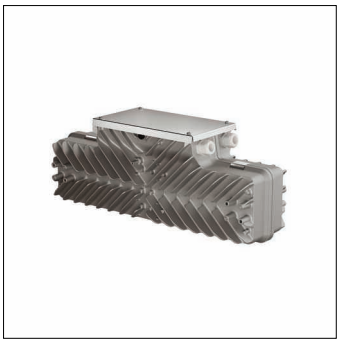

Key data
- Product type: ECG unit
- Product name: Sirius®
- Order No.: 5XA7102W01000

Lighting technology | Lamps | Control gear

Component 1

Lamps:
- Supplement: operation only permissible with connected neutral conductor

Operating device:
- Control gear: ECG
- Control: DALI, power reduction

Certificates, Standards
- Protection rating: IP66
- Insulation class: insulation class I (protective earthing)
- Certification, designation: CE, ENEC

Material, Colour
- ECG unit: diecast aluminium, powder-coated, Siteco® metallic grey (DB 702S)
- Colour specification: Siteco® metallic grey (DB 702S)

Electrical connection
- Connection: terminal
- Nominal voltage: 220..240V/380..415V, 50/60Hz, AC

Dimensions, Weight
- Length: 635mm
- Width: 181mm
- Height: 247mm
- Weight: 10.0kg

It is mandatory that the assembly instructions must be observed when planning and installing the electrical installation (to be found at www.siteco.com)
Tolerances related to thermal, electrical and photometric data according to IEC 62722
Issued 24.02.2023 - Modifications and errors subject to change - Ensure that you always use the latest version -

Siteco GmbH • Georg-Simon-Ohm-Str. 50 • 83301 Traunreut, Germany • Tel +49(8669)33-0 • Fax +49(8669)33-397 • eMail info@siteco.de • Internet www.siteco.com

siteco

Order No.: 5XA7102W01000 | **GTIN (EAN):** 4058352349014

Dimensions: Sirius,ECG-unit,DA,p-red,IC1

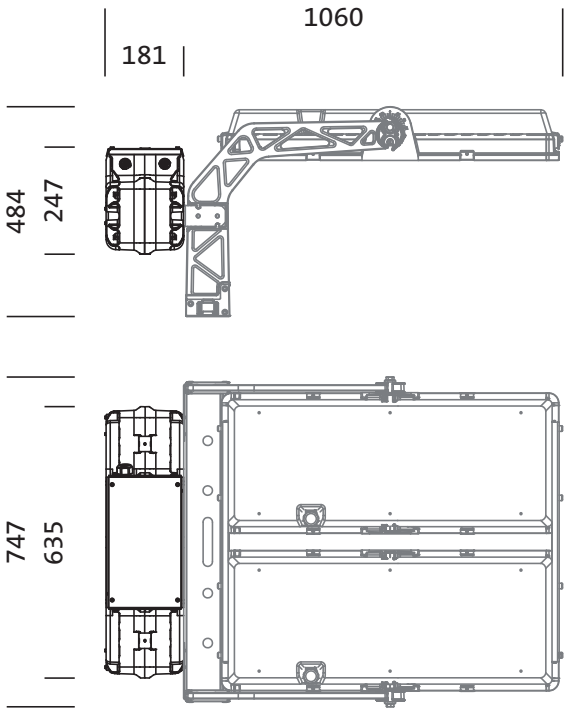

Siteco GmbH • Georg-Simon-Ohm-Str. 50 • 83301 Traunreut, Germany • Tel +49(8669)33-0 • Fax +49(8669)33-397 • eMail info@siteco.de • Internet www.siteco.com