siteco

Order No.: 5NY52660XG18 | **GTIN (EAN):** 4039806215932

Product description: rocker,wall-br,1arm,L600Ø76,galv

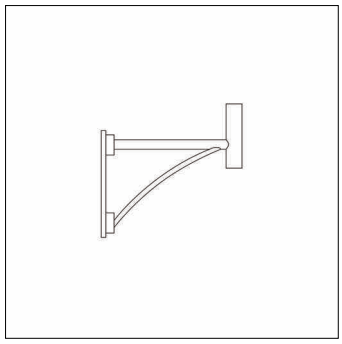

rocker, wall bracket, design arm, of steel, galvanised and coated, Siteco® metallic grey (DB 702S), 1-arm, width: 100mm, height: 500mm, bracket dimensions: 600mm, packaging unit: 1 piece

Wt. (kg):	7.4
GTIN (EAN):	4039806215932

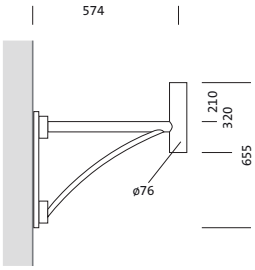

It is mandatory that the assembly instructions must be observed when planning and installing the electrical installation (to be found at www.siteco.com)
Tolerances related to thermal, electrical and photometric data according to IEC 62722
Issued 24.02.2023 - Modifications and errors subject to change - Ensure that you always use the latest version -

Siteco GmbH • Georg-Simon-Ohm-Str. 50 • 83301 Traunreut, Germany • Tel +49(8669)33-0 • Fax +49(8669)33-397 • eMail info@siteco.de • Internet www.siteco.com

siteco

Order No.: 5NY52660XG18 | **GTIN (EAN):** 4039806215932

Detailed technical description: rocker,wall-br,1arm,L600Ø76,galv

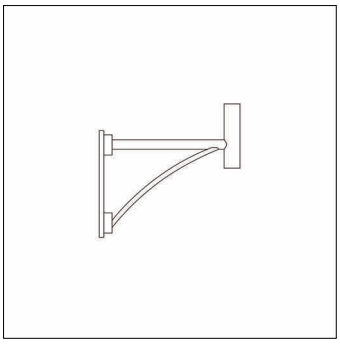

Key data
- Product type: wall bracket
- Product name: rocker
- Order No.: 5NY52660XG18

Material, Colour
- design arm: steel, galvanised and coated, Siteco® metallic grey (DB 702S)
- Colour specification: Siteco® metallic grey (DB 702S)

Dimensions, Weight
- Width: 100mm
- Height: 500mm
- Weight: 7.4kg

It is mandatory that the assembly instructions must be observed when planning and installing the electrical installation (to be found at www.siteco.com)
Tolerances related to thermal, electrical and photometric data according to IEC 62722
Issued 24.02.2023 - Modifications and errors subject to change - Ensure that you always use the latest version -

Siteco GmbH • Georg-Simon-Ohm-Str. 50 • 83301 Traunreut, Germany • Tel +49(8669)33-0 • Fax +49(8669)33-397 • eMail info@siteco.de • Internet www.siteco.com

siteco

Order No.: 5NY52660XG18 | **GTIN (EAN):** 4039806215932

Dimensions: rocker,wall-br,1arm,L600Ø76,galv

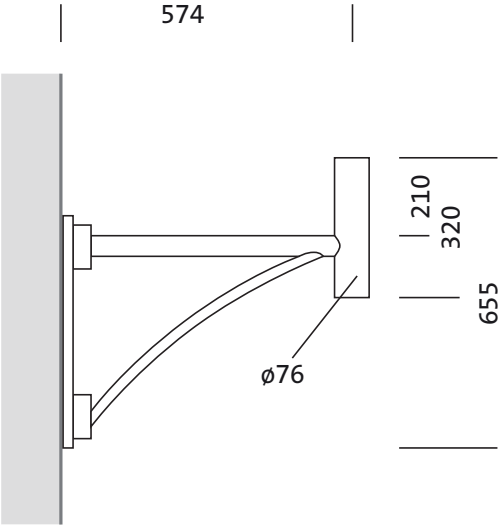

It is mandatory that the assembly instructions must be observed when planning and installing the electrical installation (to be found at www.siteco.com)
Tolerances related to thermal, electrical and photometric data according to IEC 62722
Issued 24.02.2023 - Modifications and errors subject to change - Ensure that you always use the latest version -

Siteco GmbH • Georg-Simon-Ohm-Str. 50 • 83301 Traunreut, Germany • Tel +49(8669)33-0 • Fax +49(8669)33-397 • eMail info@siteco.de • Internet www.siteco.com