siteco

Order No.: 5XA779228K01BA | **GTIN (EAN):** 4058352607374

Product description: FL11mxpro,RS07,133330lm857,DMX+RDM

Floodlight FL 11 maxi pro floodlight; light control with lens of PMMA; cover panel of toughened safety glass, transparent; light distribution: RS07, rotationally symmetric direct distribution, LEDcolour temperature: 5700K, rated luminous flux: 133.330lm, colour rendering: CRI > 80, light colour: 857; luminous efficacy: 123lm/W; brightness control: DMX+RDM; with terminal, 6-pole, max. 2.5mm², mains connection: 220..240V/380..400V AC, 50/60Hz, surge voltage resistance: line to ground: 10kV, ECG replaceable separately, LED unit replaceable without ESD environment, dustproof LED module, dimming range 10..100%; 1081W floodlight with 3x LED unit of diecast aluminium, uncoated natural; length: 713mm / width: 651mm / height: 338mm; mounting bracket, of diecast aluminium, uncoated, natural, equipment: Longlife, protection rating (complete): IP66; insulation class (complete): insulation class I (protective earthing); certification: CE; ball protection: ball impact resistant, impact resistance: IK07; only for outdoor installations, rated ambient temperature 10°C, permissible operating ambient temperature: -40..+40°C, permissible storage temperature: -40..+85°Cpackaging unit: 1 piece

IP 66 IK 07

Lamps:	LED
Wt. (kg):	29.4
GTIN (EAN):	4058352607374

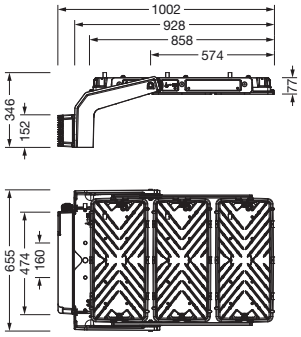

It is mandatory that the assembly instructions must be observed when planning and installing the electrical installation (to be found at www.siteco.com)
Tolerances related to thermal, electrical and photometric data according to IEC 62722
Issued 27.09.2024 - Modifications and errors subject to change - Ensure that you always use the latest version -

Siteco GmbH • Georg-Simon-Ohm-Str. 50 • 83301 Traunreut, Germany • Tel +49(8669)33-0 • Fax +49(8669)33-397 • eMail info@siteco.de • Internet www.siteco.com

siteco

Order No.: 5XA779228K01BA | **GTIN (EAN):** 4058352607374

Detailed technical description: FL11mxpro,RS07,133330lm857,DMX+RDM

Key data
- Product type: floodlight
- Product name: Floodlight FL 11 maxi pro
- Order No.: 5XA779228K01BA

Lighting technology | Lamps | Control gear

Component 1

Lighting technology:
- Light control: lens of PMMA
- Cover: cover panel, transparent
- Light distribution: RS07
- Symmetry: rotationally symmetric
- Light emission: direct distribution

Lamps:
- Lamps: with LED
- Rated luminous flux: 133330lm
- Luminous efficacy: 123lm/W
- Colour temperature: 5700K
- Colour rendering index: CRI > 80
- Light colour: 857
- Rated input power: 1081W

Operating device:
- Control: DMX+RDM

Certificates, Standards
- Protection rating: IP66
- Insulation class: insulation class I (protective earthing)
- Impact resistance: IK07
- Temperature range (operation): -40..+40°C
- Supplement: only for outdoor installations, rated ambient temperature 10°C
- Certification, designation: CE

Material, Colour
- LED unit: diecast aluminium, uncoated, natural
- Quantity: 3 piece
- Colour specification: natural
- mounting bracket: diecast aluminium, uncoated, natural
- Colour specification: natural
- Cover: cover panel of toughened safety glass

Mounting
- Mounting method, mounting location: surface-mounted, to supporting structure, to the ceiling, to the cross arm
- Arrangement: single arrangement
- Supplement: with mounting bracket

Electrical connection
- Connection: terminal, 6-pole, max. 2.5mm²
- Nominal voltage: 220..240V/380..400V, 50/60Hz, AC
- Surge voltage resistance: line to ground: 10kV

Dimensions, Weight
- Length: 713mm
- Width: 651mm
- Height: 338mm
- Weight: 29.4kg

Light emission
- Light emission: 0% at 0° inclination

Service life
- Rated service life: 50000h (L95/B10) at AT = 25°C, 100000h (L96/B10) at AT = 10°C

It is mandatory that the assembly instructions must be observed when planning and installing the electrical installation (to be found at www.siteco.com)
Tolerances related to thermal, electrical and photometric data according to IEC 62722
Issued 27.09.2024 - Modifications and errors subject to change - Ensure that you always use the latest version -

Siteco GmbH • Georg-Simon-Ohm-Str. 50 • 83301 Traunreut, Germany • Tel +49(8669)33-0 • Fax +49(8669)33-397 • eMail info@siteco.de • Internet www.siteco.com

siteco

Order No.: 5XA779228K01BA | **GTIN (EAN):** 4058352607374

Dimensions: FL11mxpro,RS07,133330lm857,DMX+RDM

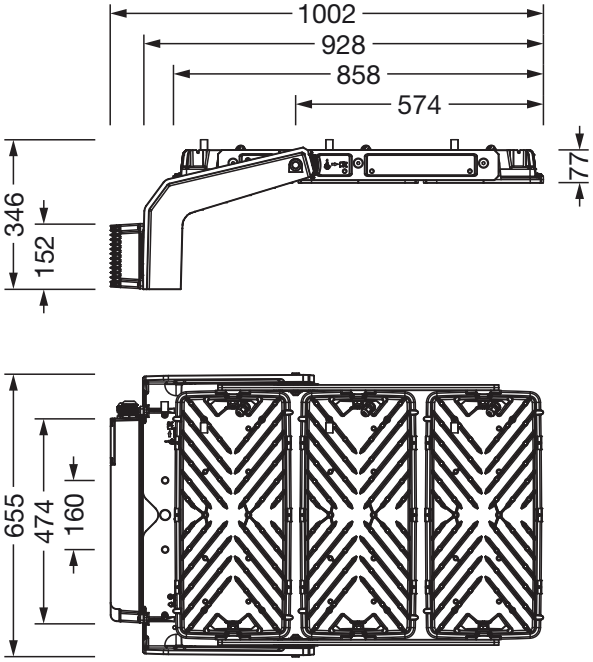

It is mandatory that the assembly instructions must be observed when planning and installing the electrical installation (to be found at www.siteco.com)
Tolerances related to thermal, electrical and photometric data according to IEC 62722
Issued 27.09.2024 - Modifications and errors subject to change - Ensure that you always use the latest version -

Siteco GmbH • Georg-Simon-Ohm-Str. 50 • 83301 Traunreut, Germany • Tel +49(8669)33-0 • Fax +49(8669)33-397 • eMail info@siteco.de • Internet www.siteco.com