siteco

Order No.: 5XA1573E1B108 | **GTIN (EAN):** 4058352167977

Product description: SmBell,ST1.2a,LED1640lm730,Plus,transp

Small Bell, mast luminaire, primary light control with 3 zone facetted reflector, of plastic, aluminium vaporised, primary optical cover: enclosure, of PMMA, transparent, light distribution: ST1.2a, light emission: direct distribution, primary light characteristic: asymmetric, installation type: suspended mounting, LED, High Power LED, rated luminous flux: 1.640lm, luminous efficacy: 124lm/W, light colour: 730, colour temperature: 3000K, control gear: Plus, control: flexible luminous flux parameterisation, time-dependent luminous flux control, constant luminous flux control, digital communication interface, power reduction, electronic power reduction, mains connection: 230..240V, AC, 50/60Hz, start of lifetime: 13W, end of service life: 14W, reduction: 7W, luminaire housing, bell-shaped, of glass-fibre reinforced polyester, coated, Siteco® metallic grey (DB 702S), please order curved mast extension separately, diameter: 430mm, height: 575mm, mounting height: 2.5..4.0m, protection rating (complete): IP54, insulation class (complete): insulation class II (safety insulation), certification: CE, ENEC, VDE, impact resistance: IK09, standard-compliant lighting for roads and squares, packaging unit: 1 piece

IP 54 IK 09

Lamps:	LED
Wt. (kg):	5.3
GTIN (EAN):	4058352167977

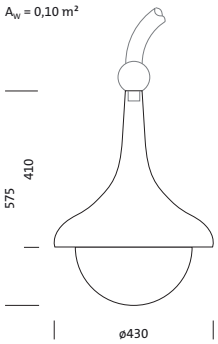

It is mandatory that the assembly instructions must be observed when planning and installing the electrical installation (to be found at www.siteco.com)
Tolerances related to thermal, electrical and photometric data according to IEC 62722
Issued 27.09.2024 - Modifications and errors subject to change - Ensure that you always use the latest version -

Siteco GmbH • Georg-Simon-Ohm-Str. 50 • 83301 Traunreut, Germany • Tel +49(8669)33-0 • Fax +49(8669)33-397 • eMail info@siteco.de • Internet www.siteco.com

siteco

Order No.: 5XA1573E1B108 | **GTIN (EAN):** 4058352167977

Detailed technical description: SmBell,ST1.2a,LED1640lm730,Plus,transp

Key data
- Product type: mast luminaire
- Product name: Small Bell
- Order No.: 5XA1573E1B108

Lighting technology | Lamps | Control gear

Component 1

Lighting technology:
- Light control: 3 zone facetted reflector of plastic, aluminium vaporised
- Cover: enclosure, transparent
- Light distribution: ST1.2a
- Beam angle: wide distribution
- Symmetry: asymmetric distribution
- Light emission: direct distribution

Lamps:
- Lamps: with High Power LED, LED
- Rated luminous flux: 1640lm
- Luminous efficacy: 124lm/W
- Colour temperature: 3000K
- Colour rendering index: CRI > 70
- Light colour: 730
- SDCM (Standard Deviation of Colour Matching): MacAdam ≤ 5 SDCM (initial)
- Rated input power begin service life: 13
- Rated input power end service life: 14
- Rated input power at 50% lumin. flux: 7

Operating device:
- Control gear: ECG Plus
- Control: Plus
- Equipment: power reduction, digital communication interface, constant luminous flux control, time-dependent luminous flux control, flexible luminous flux parameterisation
- Switching method: electronic power reduction

Certificates, Standards
- Protection rating: IP54
- Insulation class: insulation class II (safety insulation)
- Impact resistance: IK09
- Supplement: standard-compliant lighting for roads and squares
- Certification, designation: CE, ENEC, VDE

Material, Colour
- luminaire housing: glass-fibre reinforced polyester, coated, Siteco® metallic grey (DB 702S), bell-shaped, please order curved mast extension separately
- Colour specification: Siteco® metallic grey (DB 702S)
- Cover: enclosure of PMMA

Mounting
- Mounting method, mounting location: suspended mounting, to curve

Electrical connection
- Nominal voltage: 230..240V, 50/60Hz, AC
- Surge voltage resistance: 6kV 1.2/50µs

Dimensions, Weight
- Diameter: 430mm
- Height: 575mm
- Weight: 5.3kg

Light emission
- Light emission: < 3%

Service life
- Rated service life: 80000h (L97/B10) at AT = 25°C

It is mandatory that the assembly instructions must be observed when planning and installing the electrical installation (to be found at www.siteco.com)
Tolerances related to thermal, electrical and photometric data according to IEC 62722
Issued 27.09.2024 - Modifications and errors subject to change - Ensure that you always use the latest version -

Siteco GmbH • Georg-Simon-Ohm-Str. 50 • 83301 Traunreut, Germany • Tel +49(8669)33-0 • Fax +49(8669)33-397 • eMail info@siteco.de • Internet www.siteco.com

siteco

Order No.: 5XA1573E1B108 | **GTIN (EAN):** 4058352167977

Dimensions: SmBell,ST1.2a,LED1640lm730,Plus,transp

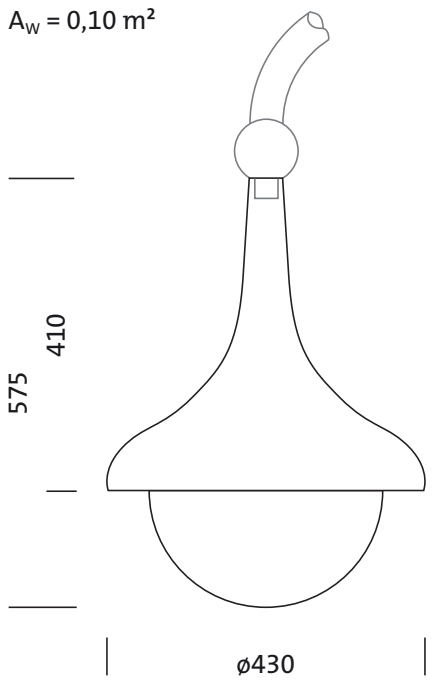

It is mandatory that the assembly instructions must be observed when planning and installing the electrical installation (to be found at www.siteco.com)
Tolerances related to thermal, electrical and photometric data according to IEC 62722
Issued 27.09.2024 - Modifications and errors subject to change - Ensure that you always use the latest version -

Siteco GmbH • Georg-Simon-Ohm-Str. 50 • 83301 Traunreut, Germany • Tel +49(8669)33-0 • Fax +49(8669)33-397 • eMail info@siteco.de • Internet www.siteco.com