siteco

Order No.: 5XA51283WS008 | **GTIN (EAN):** 4058352271964

Product description: DL20,PL1.2s,3040lm730,Plus

DL® 20, mast luminaire, primary light control with reflector, highly specular, primary optical cover: cover, of toughened safety glass of clear glass with excellent transmission level, light distribution: PL1.2s, light emission: direct distribution, primary light characteristic: symmetric, installation type: post-top, LED, High Power LED, rated luminous flux: 3.040lm, luminous efficacy: 86lm/W, light colour: 730, colour temperature: 3000K, control gear: Plus, control: overheat protection, power reduction, digital communication interface, constant luminous flux control, time-dependent luminous flux control, flexible luminous flux parameterisation, electronic power reduction, mains connection: 230..240V, 50/60Hz, connection cable pre-assembled, cable length: 5m, start of lifetime: 36W, end of service life: 36W, reduction: 17W, luminaire housing, upper part, of cast aluminium, powder-coated, Siteco® metallic grey (DB 702S), diameter: 690mm, height: 690mm, spigot size: 76mm (post-top), mounting height: 4..6m, luminaire housing, of cast aluminium, powder-coated, Siteco® metallic grey (DB 702S), equipment: standard, protection rating (complete): IP66, insulation class (complete): insulation class II (safety insulation), certification: CE, ENEC, VDE, impact resistance: IK08, permissible operating ambient temperature: -25..+35°C, standard-compliant lighting for roads and squares, packaging unit: 1 piece

IP 66 IK 08

Lamps:	LED
Wt. (kg):	13.5
GTIN (EAN):	4058352271964

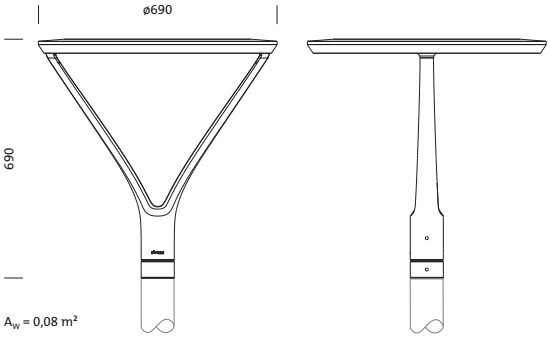

It is mandatory that the assembly instructions must be observed when planning and installing the electrical installation (to be found at www.siteco.com)
Tolerances related to thermal, electrical and photometric data according to IEC 62722
Issued 27.09.2024 - Modifications and errors subject to change - Ensure that you always use the latest version -

Siteco GmbH • Georg-Simon-Ohm-Str. 50 • 83301 Traunreut, Germany • Tel +49(8669)33-0 • Fax +49(8669)33-397 • eMail info@siteco.de • Internet www.siteco.com

siteco

Order No.: 5XA51283WS008 | **GTIN (EAN):** 4058352271964

Detailed technical description: DL20,PL1.2s,3040lm730,Plus

Key data
- Product type: mast luminaire
- Product name: DL® 20
- Order No.: 5XA51283WS008

Lighting technology | Lamps | Control gear

Component 1

Lighting technology:
- Light control: reflector, highly specular
- Cover: cover
- Light distribution: PL1.2s
- Beam angle: wide distribution
- Symmetry: symmetric distribution
- Light emission: direct distribution

Lamps:
- Lamps: with High Power LED, LED
- Rated luminous flux: 3040lm
- Luminous efficacy: 86lm/W
- Colour temperature: 3000K
- Colour rendering index: CRI > 70
- Light colour: 730
- SDCM (Standard Deviation of Colour Matching): MacAdam ≤ 5 SDCM (initial)
- Rated input power begin service life: 36
- Rated input power end service life: 36
- Rated input power at 50% lumin. flux: 17

Operating device:
- Control gear: ECG Plus
- Control: Plus
- Equipment: overheat protection, power reduction, digital communication interface, constant luminous flux control, time-dependent luminous flux control, flexible luminous flux parameterisation
- Switching method: electronic power reduction

Certificates, Standards
- Protection rating: IP66
- Insulation class: insulation class II (safety insulation)
- Impact resistance: IK08
- Temperature range (operation): -25..+35°C
- Supplement: standard-compliant lighting for roads and squares
- Certification, designation: CE, ENEC, VDE

Material, Colour
- luminaire housing, upper part: cast aluminium, powder-coated, Siteco® metallic grey (DB 702S)
- Colour specification: Siteco® metallic grey (DB 702S)
- luminaire housing: cast aluminium, powder-coated, Siteco® metallic grey (DB 702S)
- Colour specification: Siteco® metallic grey (DB 702S)
- Cover: cover of toughened safety glass of clear glass with excellent transmission level

Mounting
- Mounting method, mounting location: post-top, on mast

Electrical connection
- Nominal voltage: 230..240V, 50/60Hz
- Surge voltage resistance: 6kV 1.2/50µs
- Connection cable: pre-assembled, L= 5m

Dimensions, Weight
- Diameter: 690mm
- Height: 690mm
- Weight: 13.5kg
- Mast spigot: spigot size: 76mm

Light emission
- Light emission: 0%

Service life
- Rated service life: 100000h (L95/B10) at AT = 25°C

It is mandatory that the assembly instructions must be observed when planning and installing the electrical installation (to be found at www.siteco.com)
Tolerances related to thermal, electrical and photometric data according to IEC 62722
Issued 27.09.2024 - Modifications and errors subject to change - Ensure that you always use the latest version -

Siteco GmbH • Georg-Simon-Ohm-Str. 50 • 83301 Traunreut, Germany • Tel +49(8669)33-0 • Fax +49(8669)33-397 • eMail info@siteco.de • Internet www.siteco.com

Order No.: 5XA51283WS008 | **GTIN (EAN):** 4058352271964

Dimensions: DL20,PL1.2s,3040lm730,Plus

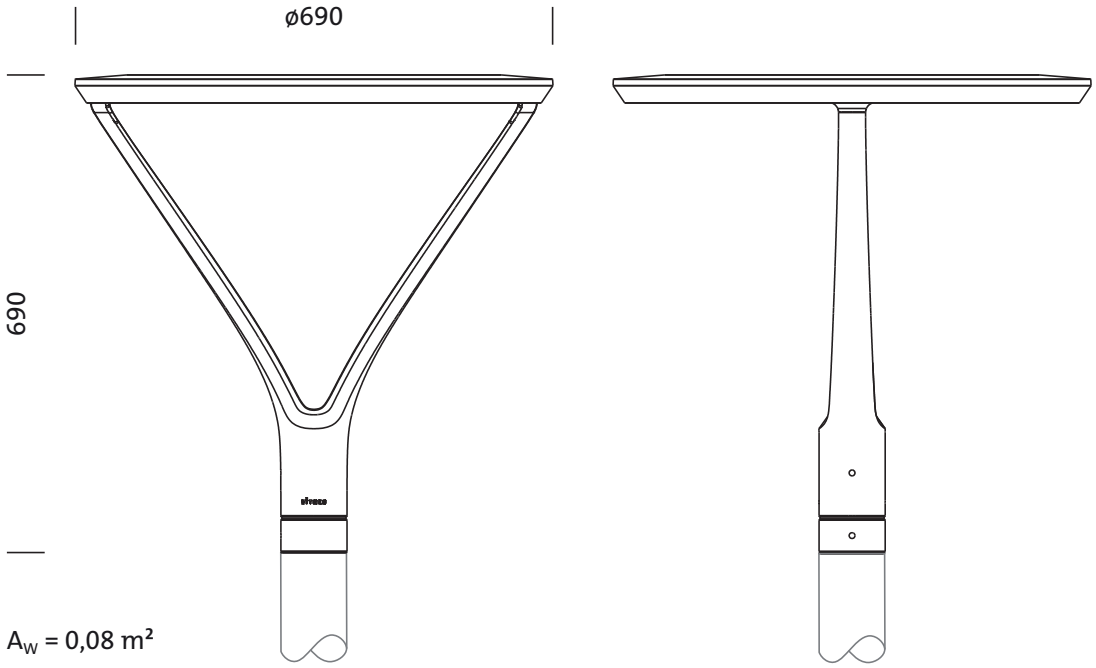

A_W = 0,08 m²

It is mandatory that the assembly instructions must be observed when planning and installing the electrical installation (to be found at www.siteco.com)
Tolerances related to thermal, electrical and photometric data according to IEC 62722
Issued 27.09.2024 - Modifications and errors subject to change - Ensure that you always use the latest version -

Siteco GmbH • Georg-Simon-Ohm-Str. 50 • 83301 Traunreut, Germany • Tel +49(8669)33-0 • Fax +49(8669)33-397 • eMail info@siteco.de • Internet www.siteco.com