siteco

Order No.: 5XA5132E1B08A4 | **GTIN (EAN):** 4058352058848

Product description: DL30,ST1.2a,2400lm830,Plus

DL® 30 LED, mast luminaire, primary light control with 3 zone facetted reflector, of plastic, silver coated, highly specular, primary optical cover: cover, of PMMA, structured, transparent, light distribution: ST1.2a, light emission: direct distribution, primary light characteristic: asymmetric, installation type: post-top, LED, High Power LED, rated luminous flux: 2.400lm, luminous efficacy: 107lm/W, light colour: 830, colour temperature: 3000K, control gear: Plus, control: flexible luminous flux parameterisation, time-dependent luminous flux control, constant luminous flux control, digital communication interface, power reduction, electronic power reduction, mains connection: 230..240V, AC, 50/60Hz, start of lifetime: 23W, end of service life: 23W, reduction: 11W, luminaire housing, of diecast aluminium, powder-coated, Siteco® metallic grey (DB 702S), length: 600mm, width: 510mm, height: 290mm, spigot size: d x l = 76 x 100mm (post-top) | with reducer (optional accessory) 60 x 100mm, mounting height: 3..6m, protection rating (complete): IP66, insulation class (complete): insulation class II (safety insulation), certification: CE, ENEC, VDE, impact resistance: IK08, permissible operating ambient temperature: -25..+40°C, standard-compliant lighting for roads and squares, packaging unit: 1 piece

IP 66 IK 08

Lamps:	LED
Wt. (kg):	7.7
GTIN (EAN):	4058352058848

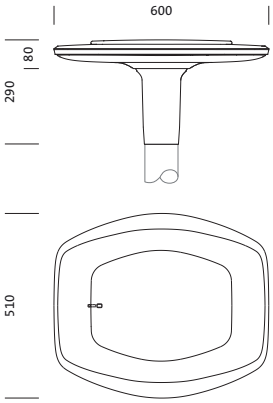

A_W = 0,06 m²

It is mandatory that the assembly instructions must be observed when planning and installing the electrical installation (to be found at www.siteco.com)
Tolerances related to thermal, electrical and photometric data according to IEC 62722
Issued 27.09.2024 - Modifications and errors subject to change - Ensure that you always use the latest version -

Siteco GmbH • Georg-Simon-Ohm-Str. 50 • 83301 Traunreut, Germany • Tel +49(8669)33-0 • Fax +49(8669)33-397 • eMail info@siteco.de • Internet www.siteco.com

siteco

Order No.: 5XA5132E1B08A4 | **GTIN (EAN):** 4058352058848

Detailed technical description: DL30,ST1.2a,2400lm830,Plus

Key data
- Product type: mast luminaire
- Product name: DL® 30 LED
- Order No.: 5XA5132E1B08A4

Lighting technology | Lamps | Control gear

Component 1

Lighting technology:
- Light control: 3 zone facetted reflector of plastic, silver coated, highly specular
- Cover: cover, transparent, structured
- Light distribution: ST1.2a
- Beam angle: wide distribution
- Symmetry: asymmetric distribution
- Light emission: direct distribution

Lamps:
- Lamps: with High Power LED, LED
- Rated luminous flux: 2400lm
- Luminous efficacy: 107lm/W
- Colour temperature: 3000K
- Colour rendering index: CRI > 80
- Light colour: 830
- SDCM (Standard Deviation of Colour Matching): MacAdam ≤ 5 SDCM (initial)
- Rated input power begin service life: 23
- Rated input power end service life: 23
- Rated input power at 50% lumin. flux: 11

Operating device:
- Control gear: ECG Plus
- Control: Plus
- Equipment: power reduction, digital communication interface, constant luminous flux control, time-dependent luminous flux control, flexible luminous flux parameterisation
- Switching method: electronic power reduction

Certificates, Standards
- Protection rating: IP66
- Insulation class: insulation class II (safety insulation)
- Impact resistance: IK08
- Temperature range (operation): -25..+40°C
- Supplement: standard-compliant lighting for roads and squares
- Certification, designation: CE, ENEC, VDE

Material, Colour
- luminaire housing: diecast aluminium, powder-coated, Siteco® metallic grey (DB 702S)
- Colour specification: Siteco® metallic grey (DB 702S)
- Cover: cover of PMMA

Mounting
- Mounting method, mounting location: post-top, on mast

Electrical connection
- Nominal voltage: 230..240V, 50/60Hz, AC
- Surge voltage resistance: 6kV 1.2/50µs

Dimensions, Weight
- Length: 600mm
- Width: 510mm
- Height: 290mm
- Weight: 7.7kg
- Mast spigot: spigot size: d x l = 76 x 100mm (post-top) | with reducer (optional accessory) 60 x 100mm

Light emission
- Light emission: 0%

Service life
- Rated service life: 100000h (L97/B10) at AT = 25°C

It is mandatory that the assembly instructions must be observed when planning and installing the electrical installation (to be found at www.siteco.com)
Tolerances related to thermal, electrical and photometric data according to IEC 62722
Issued 27.09.2024 - Modifications and errors subject to change - Ensure that you always use the latest version -

Siteco GmbH • Georg-Simon-Ohm-Str. 50 • 83301 Traunreut, Germany • Tel +49(8669)33-0 • Fax +49(8669)33-397 • eMail info@siteco.de • Internet www.siteco.com

siteco

Order No.: 5XA5132E1B08A4 | **GTIN (EAN):** 4058352058848

Dimensions: DL30,ST1.2a,2400lm830,Plus

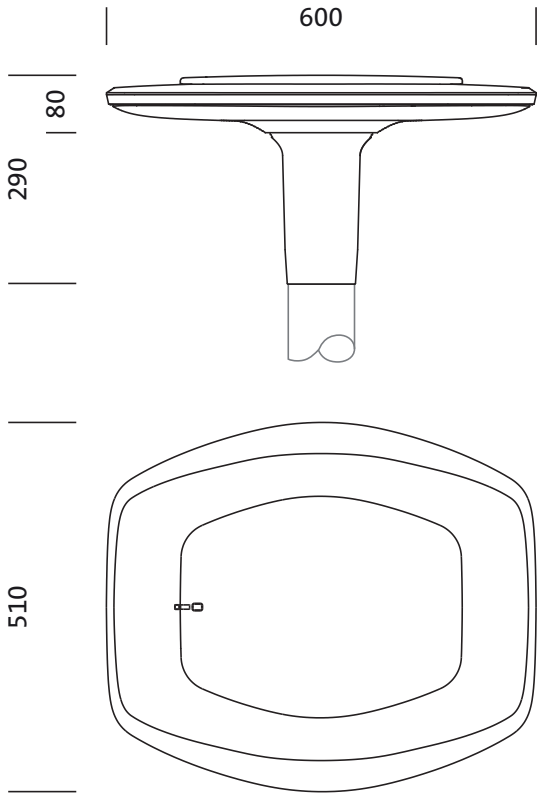

A_W = 0,06 m²

It is mandatory that the assembly instructions must be observed when planning and installing the electrical installation (to be found at www.siteco.com)
Tolerances related to thermal, electrical and photometric data according to IEC 62722
Issued 27.09.2024 - Modifications and errors subject to change - Ensure that you always use the latest version -

Siteco GmbH • Georg-Simon-Ohm-Str. 50 • 83301 Traunreut, Germany • Tel +49(8669)33-0 • Fax +49(8669)33-397 • eMail info@siteco.de • Internet www.siteco.com

siteco

Order No.: 5XA5132E1B08A4 | **GTIN (EAN):** 4058352058848

Planning data: DL30,ST1.2a,2400lm830,Plus

5XA5132E1B08A4: 1x LED

4058352058848
5XA5132E1B08A4
LED 3000 K | CRI ≥ 80 ϕ_N 2400 lm

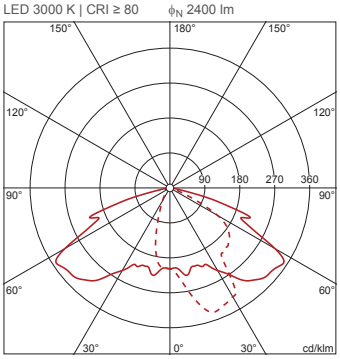

C 0/180 C 90/270

Luminous intensity class according to
EN13201-2: G3

Siteco GmbH • Georg-Simon-Ohm-Str. 50 • 83301 Traunreut, Germany • Tel +49(8669)33-0 • Fax +49(8669)33-397 • eMail info@siteco.de • Internet www.siteco.com