siteco

Order No.: 59US1HXSPR2A | **GTIN (EAN):** 4058352361979

Product description: SConSHead,SensHdPR2S,lokCtrlcentCtrl

Siteco Connect Sensor-HeadSensor-Head PR2-S, slave, local control, central control, dimmable, installation type: slip-in mounting, installation location: on interface, of plastic, certification: CE, VDE, 1 x PIR movement sensor, 1 x light sensor, packaging unit: 1 piece

Wt. (kg):	0.1
GTIN (EAN):	4058352361979

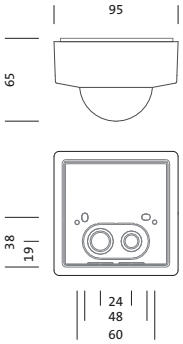

It is mandatory that the assembly instructions must be observed when planning and installing the electrical installation (to be found at www.siteco.com)
Tolerances related to thermal, electrical and photometric data according to IEC 62722
Issued 05.01.2024 - Modifications and errors subject to change - Ensure that you always use the latest version -

Siteco GmbH • Georg-Simon-Ohm-Str. 50 • 83301 Traunreut, Germany • Tel +49(8669)33-0 • Fax +49(8669)33-397 • eMail info@siteco.de • Internet www.siteco.com

siteco

Order No.: 59US1HXSPR2A | **GTIN (EAN):** 4058352361979

Detailed technical description: SConSHead,SensHdPR2S,lokCtrlcentCtrl

Key data
- System family: Siteco Connect 11, DALI-2, SITECO Connect, SITECO Connect 22
- Product type: sensor
- Product name: Siteco Connect Sensor-Head
- Order No.: 59US1HXSPR2A

Lighting technology | Lamps | Control gear

Component 1

Operating device:
- Control: DALI 2, dimmable

Certificates, Standards
- Temperature range (operation): -20..+50°C
- Certification, designation: CE, VDE

Material, Colour
- housing: plastic, white
- Colour specification: white

Mounting
- Mounting method, mounting location: slip-in mounting, on interface
- Mounting height: 4..14m

Dimensions, Weight
- Length: 95mm
- Width: 95mm
- Height: 65mm
- Weight: 0.1kg

Inputs

1x PIR movement sensor
- Connection: system connector
- Detection range: max. 30x4m
- Option: 5 detection levels, 120 switching zones
- Feature: detection range can be limited with shield, rectangular detection area

1x light sensor
- Feature: light sensor with 'local control' without function

It is mandatory that the assembly instructions must be observed when planning and installing the electrical installation (to be found at www.siteco.com)
Tolerances related to thermal, electrical and photometric data according to IEC 62722
Issued 05.01.2024 - Modifications and errors subject to change - Ensure that you always use the latest version -

Siteco GmbH • Georg-Simon-Ohm-Str. 50 • 83301 Traunreut, Germany • Tel +49(8669)33-0 • Fax +49(8669)33-397 • eMail info@siteco.de • Internet www.siteco.com

Order No.: 59US1HXSPR2A | **GTIN (EAN):** 4058352361979

Dimensions: SConSHead,SensHdPR2S,lokCtrlcentCtrl

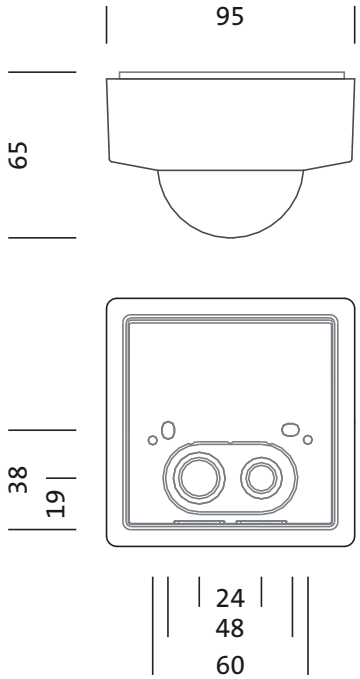

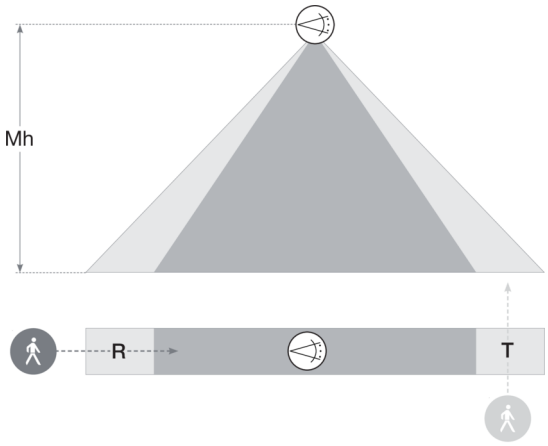

Sensor Head PR2

Mh	R	T
14m	30 x 4m	30 x 4m
12m	30 x 4m	30 x 4m
10m	25 x 4m	25 x 4m
8m	20 x 4m	20 x 4m
6m	15 x 4m	15 x 4m
4m	10 x 4m	10 x 4m

It is mandatory that the assembly instructions must be observed when planning and installing the electrical installation (to be found at www.siteco.com)
Tolerances related to thermal, electrical and photometric data according to IEC 62722
Issued 05.01.2024 - Modifications and errors subject to change - Ensure that you always use the latest version -

Siteco GmbH • Georg-Simon-Ohm-Str. 50 • 83301 Traunreut, Germany • Tel +49(8669)33-0 • Fax +49(8669)33-397 • eMail info@siteco.de • Internet www.siteco.com