siteco

Order No.: 59MQ14005021 | **GTIN (EAN):** 4058352465349

Product description: Apol-s,rec.frame,f.lum.1245x310

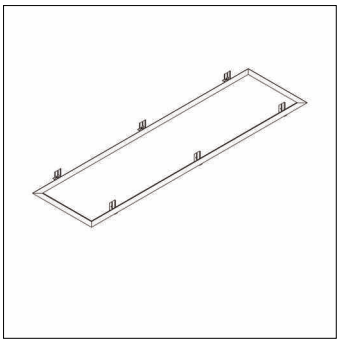

Apollon® square, ceiling recessing frame, installation type: recessed, mounting frame, of sheet steel, white, length: 1.289mm, width: 352mm, packaging unit: 1 piece

Wt. (kg):	0.9
GTIN (EAN):	4058352465349

It is mandatory that the assembly instructions must be observed when planning and installing the electrical installation (to be found at www.siteco.com)
Tolerances related to thermal, electrical and photometric data according to IEC 62722
Issued 19.07.2024 - Modifications and errors subject to change - Ensure that you always use the latest version -

Siteco GmbH • Georg-Simon-Ohm-Str. 50 • 83301 Traunreut, Germany • Tel +49(8669)33-0 • Fax +49(8669)33-397 • eMail info@siteco.de • Internet www.siteco.com

siteco

Order No.: 59MQ14005021 | **GTIN (EAN):** 4058352465349

Detailed technical description: Apol-s,rec.frame,f.lum.1245x310

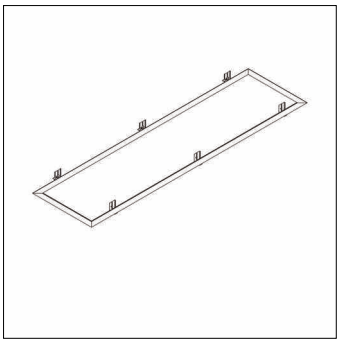

Key data
- Product type: ceiling recessing frame
- Product name: Apollon® square
- Order No.: 59MQ14005021

Material, Colour
- mounting frame: sheet steel, white
- Colour specification: white

Mounting
- Mounting method, mounting location: recessed, in the ceiling
- Supplement: for luminaire Lx B= 1245 x 310mm

Dimensions, Weight
- Length: 1289mm
- Width: 352mm
- Weight: 0.9kg

It is mandatory that the assembly instructions must be observed when planning and installing the electrical installation (to be found at www.siteco.com)
Tolerances related to thermal, electrical and photometric data according to IEC 62722
Issued 19.07.2024 - Modifications and errors subject to change - Ensure that you always use the latest version -

Siteco GmbH • Georg-Simon-Ohm-Str. 50 • 83301 Traunreut, Germany • Tel +49(8669)33-0 • Fax +49(8669)33-397 • eMail info@siteco.de • Internet www.siteco.com