siteco

Order No.: 5XA7772C2F2A | **GTIN (EAN):** 4058352655177

Product description: FL21iQmn,PL33T,12060lm730,SR,desbr

Floodlight FL 21 iQ mini, floodlight, primary light control with lens, of PMMA, primary optical cover: protective disc, of toughened safety glass, transparent, light distribution: PL33T, light emission: direct distribution, installation type: surface-mounted, LED, High Power LED, rated luminous flux: 12.060lm, luminous efficacy: 138lm/W, light colour: 730, colour temperature: 3000K, control: Street-Remote, Auto-Match, Temp-Guard, Night-Set, Smart-Wire, Desk-Remote (wireless, voltage-free reading and setting of iQ features in the workshop via application-optimized NFC function/RFID function), optimised constant luminous flux control (CLO 2.0), with terminal, 6-pole, mains connection: 220..240V, AC, 50/60Hz, start of lifetime: 87W, end of service life: 92W, reduction: 40W, luminaire housing, of diecast aluminium, powder-coated, Siteco® metallic grey (DB 702S), corrosivity category C5 mid according to DIN EN ISO 12944, sealing non-destructively replaceable, design bracket, of diecast aluminium, powder-coated, Siteco® metallic grey (DB 702S), protection rating (complete): IP66, insulation class (complete): insulation class II (safety insulation), certification: CE, ENEC, VDE, protection symbol: D, impact resistance: IK08, permissible operating ambient temperature: -40..+40°C, permissible operating ambient temperature for outdoor applications: -40..+50°C, standard: DIN EN 12944, LABS conformity tested according to VDMA 24364:2018-05, packaging unit: 1 piece

IP 66 IK 08

Lamps:	LED
Wt. (kg):	6.7
GTIN (EAN):	4058352655177

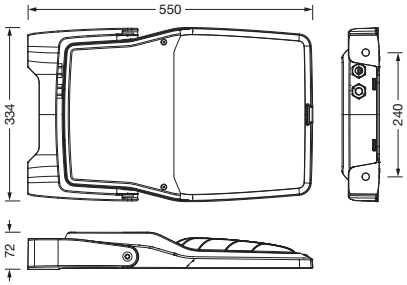

It is mandatory that the assembly instructions must be observed when planning and installing the electrical installation (to be found at www.siteco.com)
Tolerances related to thermal, electrical and photometric data according to IEC 62722
Issued 13.04.2024 - Modifications and errors subject to change - Ensure that you always use the latest version -

Siteco GmbH • Georg-Simon-Ohm-Str. 50 • 83301 Traunreut, Germany • Tel +49(8669)33-0 • Fax +49(8669)33-397 • eMail info@siteco.de • Internet www.siteco.com

siteco

Order No.: 5XA7772C2F2A | **GTIN (EAN):** 4058352655177

Detailed technical description: FL21iQmn,PL33T,12060lm730,SR,desbr

Key data
- Product type: floodlight
- Product name: Floodlight FL 21 iQ mini
- Order No.: 5XA7772C2F2A

Lighting technology | Lamps | Control gear

Component 1

Lighting technology:
- Light control: lens of PMMA
- Cover: protective disc, transparent
- Light distribution: PL33T
- Light emission: direct distribution

Lamps:
- Lamps: with High Power LED, LED
- Rated luminous flux: 12060lm
- Luminous efficacy: 138lm/W
- Colour temperature: 3000K
- Colour rendering index: CRI > 70
- Light colour: 730
- Rated input power begin service life: 87
- Rated input power end service life: 92
- Rated input power at 50% lumin. flux: 40
- Supplement: prepared for through-wiring

Operating device:
- Control: iQ Street-Remote
- Equipment: optimised constant luminous flux control (CLO 2.0), Desk-Remote (wireless, voltage-free reading and setting of iQ features in the workshop via application-optimized NFC function/RFID function), Smart-Wire, Night-Set, Temp-Guard, Auto-Match, Street-Remote

Certificates, Standards
- Protection rating: IP66
- Insulation class: insulation class II (safety insulation)
- Impact resistance: IK08
- Protection symbol: D
- Temperature range (operation): -40..+40°C
- Supplement: LABS conformity tested according to VDMA 24364:2018-05
- Standard: DIN EN 12944
- Corrosion protection: corrosivity category C5 mid according to DIN EN ISO 12944
- Certification, designation: CE, ENEC, VDE

Material, Colour
- luminaire housing: diecast aluminium, powder-coated, Siteco® metallic grey (DB 702S), sealing non-destructively replaceable
- Colour specification: Siteco® metallic grey (DB 702S)
- design bracket: diecast aluminium, powder-coated, Siteco® metallic grey (DB 702S)
- Colour specification: Siteco® metallic grey (DB 702S)
- Cover: protective disc of toughened safety glass

Mounting
- Mounting method, mounting location: surface-mounted, to the wall
- Arrangement: single arrangement
- Supplement: with mounting bracket

Electrical connection
- Connection: terminal, 6-pole
- Nominal voltage: 220..240V, 50/60Hz, AC
- Surge voltage resistance: surge voltage resistance: 10kV (common mode); 6kV (differential mode)

Dimensions, Weight
- Weight: 6.7kg

Service life
- Rated service life: 100000h (L97/B10) at AT = 25°C

It is mandatory that the assembly instructions must be observed when planning and installing the electrical installation (to be found at www.siteco.com)
Tolerances related to thermal, electrical and photometric data according to IEC 62722
Issued 13.04.2024 - Modifications and errors subject to change - Ensure that you always use the latest version -

Siteco GmbH • Georg-Simon-Ohm-Str. 50 • 83301 Traunreut, Germany • Tel +49(8669)33-0 • Fax +49(8669)33-397 • eMail info@siteco.de • Internet www.siteco.com

siteco

Order No.: 5XA7772C2F2A | **GTIN (EAN):** 4058352655177

Dimensions: FL21iQmn,PL33T,12060lm730,SR,desbr

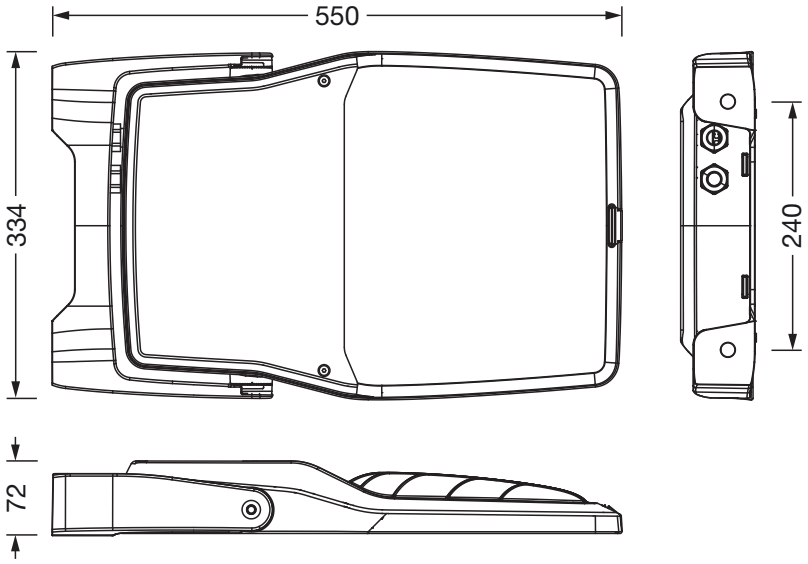

It is mandatory that the assembly instructions must be observed when planning and installing the electrical installation (to be found at www.siteco.com)
Tolerances related to thermal, electrical and photometric data according to IEC 62722
Issued 13.04.2024 - Modifications and errors subject to change - Ensure that you always use the latest version -

Siteco GmbH • Georg-Simon-Ohm-Str. 50 • 83301 Traunreut, Germany • Tel +49(8669)33-0 • Fax +49(8669)33-397 • eMail info@siteco.de • Internet www.siteco.com