siteco

Order No.: 52TM16CN49XG | **GTIN (EAN):** 4058352903469

Product description: Lic21Pe,wd,9240lm840,MLCi,IP40,L1500,wh

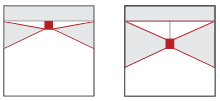

Licross® 21 Performance MO, luminaire insert, of sheet steel, galvanised, coil coated, white, length: 1.500mm, width: 120mm, height: 123mm, LED rated luminous flux: 9.240lm, light colour: 840, control gear: ON/OFF Multilumen, CLOi, control gear: ECG Multilumen, with plug, 3-pole, with phase selection, mains connection: 220..240V, AC, 50/60Hz, start of lifetime: 50W, end of service life: 61W, halogen-free wiring, primary light control with lens, of plastic, primary optical cover: cover, of PMMA, light emission: direct/indirect distribution, primary light characteristic: symmetric, protection rating (complete): IP40, insulation class (complete): insulation class I (protective earthing), certification: CE, ENEC, UKCA, protection symbol: D if used in an environment without relevant dust loads with corresponding accessories, impact resistance: IK06, permissible ambient temperature for indoor applications: -35..+45°C, corresponds to IFS (International Featured Standards) requirements for safety and quality in the food industry, reducing of maximum allowable ambient temperature of 5°C with ceiling mounting, LABS conformity tested according to VDMA 24364:2018-05, packaging unit: 1 piece

IP 40 IK 06

Lamps:	LED
Wt. (kg):	3.1
GTIN (EAN):	4058352903469

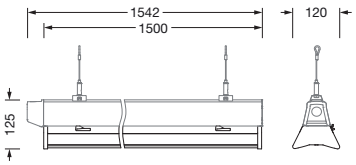

It is mandatory that the assembly instructions must be observed when planning and installing the electrical installation (to be found at www.siteco.com)
Tolerances related to thermal, electrical and photometric data according to IEC 62722
Issued 01.03.2024 - Modifications and errors subject to change - Ensure that you always use the latest version -

Siteco GmbH • Georg-Simon-Ohm-Str. 50 • 83301 Traunreut, Germany • Tel +49(8669)33-0 • Fax +49(8669)33-397 • eMail info@siteco.de • Internet www.siteco.com

siteco

Order No.: 52TM16CN49XG | **GTIN (EAN):** 4058352903469

Detailed technical description: Lic21Pe,wd,9240lm840,MLCi,IP40,L1500,wh

Key data
- Product type: luminaire insert
- Product name: Licross® 21 Performance MO
- Order No.: 52TM16CN49XG

Lighting technology | Lamps | Control gear

Component 1

Lighting technology:
- Light control: lens of plastic
- Cover: cover
- Beam angle: wide distribution
- Symmetry: symmetric
- Light emission: direct/indirect distribution, 80:20
- UGR viewing direction along longitudinal luminaire axis: ≤ 19
- UGR viewing direction along lateral luminaire axis: ≤ 22

Lamps:
- Lamps: with LED
- Rated luminous flux: 9240lm
- Luminous efficacy: 183lm/W
- Colour temperature: 4000K
- Colour rendering index: CRI > 80
- Light colour: 840
- SDCM (Standard Deviation of Colour Matching): MacAdam ≤ 3 SDCM (initial)
- Rated input power begin service life: 50
- Rated input power end service life: 61
- Supplement: halogen-free wiring

Operating device:
- Control gear: ECG Multilumen
- Control: ON/OFF Multilumen, CLOi

Certificates, Standards
- Protection rating: IP40
- Insulation class: insulation class I (protective earthing)
- Impact resistance: IK06
- Protection symbol: D if used in an environment without relevant dust loads with corresponding accessories
- Temperature range (operation): -35..+45°C
- Supplement: corresponds to IFS (International Featured Standards) requirements for safety and quality in the food industry, reducing of maximum allowable ambient temperature of 5°C with ceiling mounting, LABS conformity tested according to VDMA 24364:2018-05
- Certification, designation: CE, ENEC, UKCA

Material, Colour
- Licross® LED insert: sheet steel, galvanised, coil coated, white
- Colour specification: white
- Cover: cover of PMMA

Mounting
- Mounting method, mounting location: slip-in mounting, in the Licross® trunking rail
- Arrangement: single/continuous arrangement
- Supplement: only suitable for indoor use

Electrical connection
- Connection: plug, 3-pole, with phase selection
- Nominal voltage: 220..240V, 50/60Hz, AC

Dimensions, Weight
- Length: 1500mm
- Width: 120mm
- Height: 123mm
- Weight: 3.1kg

Service life
- Rated service life: 75000h (L100/B50) at AT = 25°C

It is mandatory that the assembly instructions must be observed when planning and installing the electrical installation (to be found at www.siteco.com)
Tolerances related to thermal, electrical and photometric data according to IEC 62722
Issued 01.03.2024 - Modifications and errors subject to change - Ensure that you always use the latest version -

Siteco GmbH • Georg-Simon-Ohm-Str. 50 • 83301 Traunreut, Germany • Tel +49(8669)33-0 • Fax +49(8669)33-397 • eMail info@siteco.de • Internet www.siteco.com

Order No.: 52TM16CN49XG | **GTIN (EAN):** 4058352903469

Dimensions: Lic21Pe,wd,9240lm840,MLCi,IP40,L1500,wh

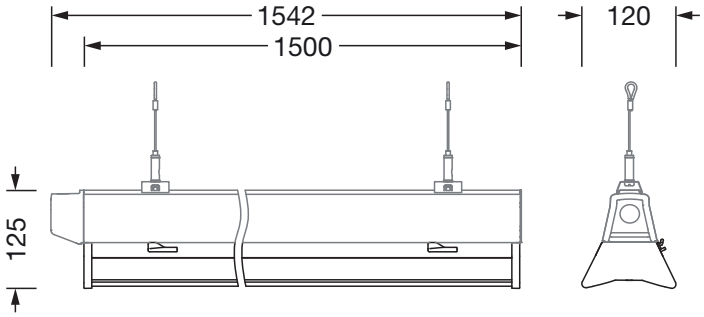

Siteco GmbH • Georg-Simon-Ohm-Str. 50 • 83301 Traunreut, Germany • Tel +49(8669)33-0 • Fax +49(8669)33-397 • eMail info@siteco.de • Internet www.siteco.com