siteco

Order No.: 51HL61D14DCA | **GTIN (EAN):** 4058352348871

Product description: HB11,nrrw,9790lm840,DA

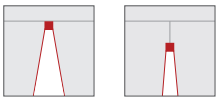

Highbay 11, LED high bay luminaire, primary light control with lens, of PMMA, light emission: direct distribution, primary light characteristic: symmetric, installation type: surface-mounted, suspended mounting, for 1x 2x LED, rated luminous flux: 9.790lm, luminous efficacy: 176lm/W, light colour: 840, colour temperature: 4000K, control gear: DALI, with terminal, 5-pole, max. 2.5mm², mains connection: 230..240V, AC, 50/60Hz, rated input power: 56W, LED unit, of diecast aluminium, coated, metallic grey (RAL 9006), length: 470mm, width: 500mm, height: 65mm, housing, of diecast aluminium, coated, metallic grey (RAL 9006), protection rating (complete): IP65, insulation class (complete): insulation class I (protective earthing), certification: CE, ENEC, VDE, UKCA, protection symbol: D, impact resistance: IK08 with glass or PC cover, permissible operating ambient temperature: -35..+70°C, corresponds to IFS (International Featured Standards) requirements for safety and quality in the food industry, reducing of maximum allowable ambient temperature of 5°C with ceiling mounting, packaging unit: 1 piece

IP 65

Lamps:	1x 2x LED
Wt. (kg):	4.3
GTIN (EAN):	4058352348871

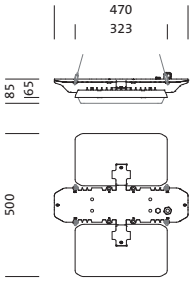

It is mandatory that the assembly instructions must be observed when planning and installing the electrical installation (to be found at www.siteco.com)
Tolerances related to thermal, electrical and photometric data according to IEC 62722
Issued 27.09.2024 - Modifications and errors subject to change - Ensure that you always use the latest version -

Siteco GmbH • Georg-Simon-Ohm-Str. 50 • 83301 Traunreut, Germany • Tel +49(8669)33-0 • Fax +49(8669)33-397 • eMail info@siteco.de • Internet www.siteco.com

siteco

Order No.: 51HL61D14DCA | **GTIN (EAN):** 4058352348871

Detailed technical description: HB11,nrrw,9790lm840,DA

Key data
- Product type: LED high bay luminaire
- Product name: Highbay 11
- Order No.: 51HL61D14DCA

Lighting technology | Lamps | Control gear

Component 1

Lighting technology:
- Light control: lens of PMMA
- Beam angle: narrow distribution
- Symmetry: symmetric
- Light emission: direct distribution
- UGR viewing direction along longitudinal luminaire axis: ≤ 22
- UGR viewing direction along lateral luminaire axis: ≤ 22

Lamps:
- Lamps: with 1x 2x LED
- Rated luminous flux: 9790lm
- Luminous efficacy: 176lm/W
- Colour temperature: 4000K
- Colour rendering index: CRI > 80
- Light colour: 840
- SDCM (Standard Deviation of Colour Matching): MacAdam ≤ 3 SDCM (initial)
- Rated input power: 56W

Operating device:
- Control gear: ECG DALI
- Control: DALI

Certificates, Standards
- Protection rating: IP65
- Insulation class: insulation class I (protective earthing)
- Impact resistance: IK08 with glass or PC cover
- Protection symbol: D
- Temperature range (operation): -35..+70°C
- Supplement: corresponds to IFS (International Featured Standards) requirements for safety and quality in the food industry, reducing of maximum allowable ambient temperature of 5°C with ceiling mounting
- Certification, designation: CE, ENEC, VDE, UKCA

Material, Colour
- LED unit: diecast aluminium, coated, metallic grey (RAL 9006)
- Quantity: 2 piece
- Colour specification: metallic grey (RAL 9006)
- housing: diecast aluminium, coated, metallic grey (RAL 9006)
- Quantity: 1 piece
- Colour specification: metallic grey (RAL 9006)

Mounting
- Mounting method, mounting location: suspended mounting, surface-mounted, to wire, to the ceiling, to the chain
- Mounting height: 6..20m
- Arrangement: single arrangement
- Supplement: only suitable for indoor use, mounting accessories required, please order separately

Electrical connection
- Connection: terminal, 5-pole, max. 2.5mm²
- Nominal voltage: 230..240V, 50/60Hz, AC

Dimensions, Weight
- Length: 470mm
- Width: 500mm
- Height: 65mm
- Weight: 4.3kg

Service life
- Rated service life: 70000h (L90/B50) at AT = 25°C, 50000h (L90/B50) at AT = ta max

It is mandatory that the assembly instructions must be observed when planning and installing the electrical installation (to be found at www.siteco.com)
Tolerances related to thermal, electrical and photometric data according to IEC 62722
Issued 27.09.2024 - Modifications and errors subject to change - Ensure that you always use the latest version -

Siteco GmbH • Georg-Simon-Ohm-Str. 50 • 83301 Traunreut, Germany • Tel +49(8669)33-0 • Fax +49(8669)33-397 • eMail info@siteco.de • Internet www.siteco.com

Order No.: 51HL61D14DCA | **GTIN (EAN):** 4058352348871

Dimensions: HB11,nrrw,9790lm840,DA

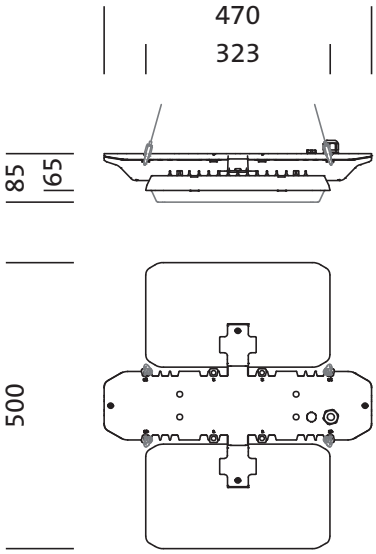

It is mandatory that the assembly instructions must be observed when planning and installing the electrical installation (to be found at www.siteco.com)
Tolerances related to thermal, electrical and photometric data according to IEC 62722
Issued 27.09.2024 - Modifications and errors subject to change - Ensure that you always use the latest version -

Siteco GmbH • Georg-Simon-Ohm-Str. 50 • 83301 Traunreut, Germany • Tel +49(8669)33-0 • Fax +49(8669)33-397 • eMail info@siteco.de • Internet www.siteco.com

siteco

Order No.: 51HL61D14DCA | **GTIN (EAN):** 4058352348871

Planning data: HB11,nrrw,9790lm840,DA

51HL61D14DCA: 1x LED

4058352348871
51HL61D14DCA
LED 4000 K | CRI ≥ 80 ϕ_N 9790 lm

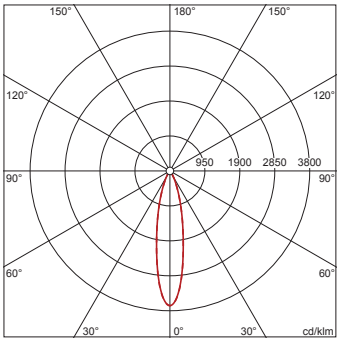

$\phi_{\downarrow}$ 100% $\phi_{\uparrow}$ 0%

Luminance values (cd/m²)

	C 0/180	C 90/270
L_{80}	3781	6395
L_{70}	7893	5976
L_{65}	8150	5920

UGR 19.3 18.8
X 4H Y 8H ρ 70/50/20 S 0.25H

51HL61D14DCA + 59HL91001: 1x LED

4058352348871 + 4058352323519
51HL61D14DCA + 59HL91001
LED 4000 K | CRI ≥ 80 ϕ_N 9450 lm

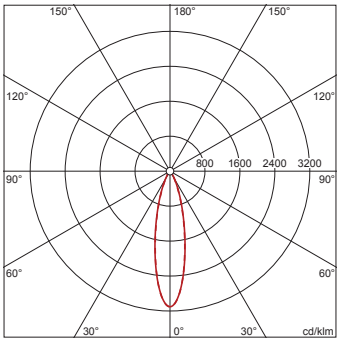

$\phi_{\downarrow}$ 100% $\phi_{\uparrow}$ 0%

Luminance values (cd/m²)

	C 0/180	C 90/270
L_{80}	3160	5355
L_{70}	8538	7309
L_{65}	9877	7695

UGR 20.1 19.7
X 4H Y 8H ρ 70/50/20 S 0.25H

It is mandatory that the assembly instructions must be observed when planning and installing the electrical installation (to be found at www.siteco.com)
Tolerances related to thermal, electrical and photometric data according to IEC 62722
Issued 27.09.2024 - Modifications and errors subject to change - Ensure that you always use the latest version -

Siteco GmbH • Georg-Simon-Ohm-Str. 50 • 83301 Traunreut, Germany • Tel +49(8669)33-0 • Fax +49(8669)33-397 • eMail info@siteco.de • Internet www.siteco.com