siteco

Order No.: 5WM25CD02XN2 | **GTIN (EAN):** 4058352385340

Product description: TL13,51600lm840,DA,TSG

TL 13, tunnel luminaire, primary optical cover: cover panel, of toughened safety glass, light emission: direct distribution, primary light characteristic: symmetric, installation type: surface-mounted, connection on control gear side,LED, Mid Power LED, rated luminous flux: 51.600lm, luminous efficacy: 188lm/W, light colour: 840, colour temperature: 4000K, control gear: DALI, with connection cable with system connection, mains connection: 220..240V, AC, 50/60Hz, connection cable pre-assembled, cable length: 1m, wiring characteristics: FE05B/CPR class B2ca s1a-d1-a1, rated input power: 275W, connection on mains side,7-pole, max. 10mm² (5G+2), with terminal, luminaire housing, of stainless steel 1.4404 (AISI316), etched and passivated, length: 1.529mm, width: 56mm, height: 36mm, e-box, of stainless steel 1.4404 (AISI316), etched and passivated, length: 510mm, width: 213mm, height: 112mm, protection rating (complete): IP66, certification: CE, packaging unit: set of 12

IP 66 CE

Lamps:	LED
Wt. (kg):	30.1
GTIN (EAN):	4058352385340

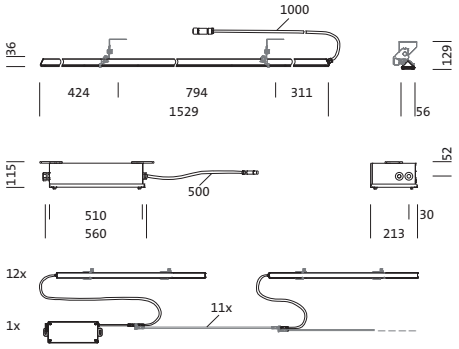

It is mandatory that the assembly instructions must be observed when planning and installing the electrical installation (to be found at www.siteco.com)
Tolerances related to thermal, electrical and photometric data according to IEC 62722
Issued 27.09.2024 - Modifications and errors subject to change - Ensure that you always use the latest version -

Siteco GmbH • Georg-Simon-Ohm-Str. 50 • 83301 Traunreut, Germany • Tel +49(8669)33-0 • Fax +49(8669)33-397 • eMail info@siteco.de • Internet www.siteco.com

siteco

Order No.: 5WM25CD02XN2 | **GTIN (EAN):** 4058352385340

Detailed technical description: TL13,51600lm840,DA,TSG

Key data
- Product type: tunnel luminaire
- Product name: TL 13
- Order No.: 5WM25CD02XN2

Lighting technology | Lamps | Control gear

Component 1

Lighting technology:
- Cover: cover panel
- Symmetry: symmetric distribution
- Light emission: direct distribution

Lamps:
- Supplement: minimum bending radius: cable diameter x 10

Operating device:
- Control gear: ECG DALI
- Control: DALI

Component 2

Component 3

Certificates, Standards
- Protection rating: IP66
- Certification, designation: CE

Material, Colour
- luminaire housing: stainless steel 1.4404 (AISI316), etched and passivated
- Quantity: 12 piece
- e-box: stainless steel 1.4404 (AISI316), etched and passivated
- Quantity: 1 piece
- Cover: cover panel of toughened safety glass

Mounting
- Mounting method, mounting location: surface-mounted, to supporting structure, to the ceiling

Electrical connection
- Connection: connection cable with system connection
- Nominal voltage: 220..240V, 50/60Hz, AC
- Connection cable: pre-assembled, L= 1m

Dimensions, Weight
- Length: 1529mm
- Width: 56mm
- Height: 36mm
- Weight: 30.1kg

It is mandatory that the assembly instructions must be observed when planning and installing the electrical installation (to be found at www.siteco.com)
Tolerances related to thermal, electrical and photometric data according to IEC 62722
Issued 27.09.2024 - Modifications and errors subject to change - Ensure that you always use the latest version -

Siteco GmbH • Georg-Simon-Ohm-Str. 50 • 83301 Traunreut, Germany • Tel +49(8669)33-0 • Fax +49(8669)33-397 • eMail info@siteco.de • Internet www.siteco.com

siteco

Order No.: 5WM25CD02XN2 | **GTIN (EAN):** 4058352385340

Dimensions: TL13,51600lm840,DA,TSG

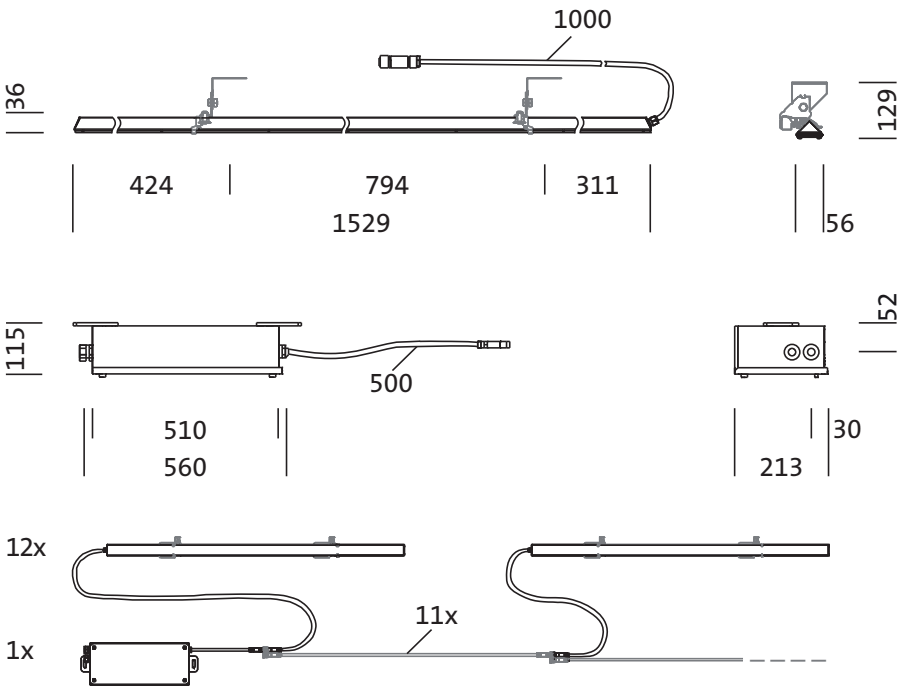

It is mandatory that the assembly instructions must be observed when planning and installing the electrical installation (to be found at www.siteco.com)
Tolerances related to thermal, electrical and photometric data according to IEC 62722
Issued 27.09.2024 - Modifications and errors subject to change - Ensure that you always use the latest version -

Siteco GmbH • Georg-Simon-Ohm-Str. 50 • 83301 Traunreut, Germany • Tel +49(8669)33-0 • Fax +49(8669)33-397 • eMail info@siteco.de • Internet www.siteco.com

siteco

Order No.: 5WM25CD02XN2 | **GTIN (EAN):** 4058352385340

Planning data: TL13,51600lm840,DA,TSG

5WM25CD02XN2: 1x LED

4058352385340
5WM25CD02XN2
LED 4000 K | CRI ≥ 80 ϕ_N 4300 lm

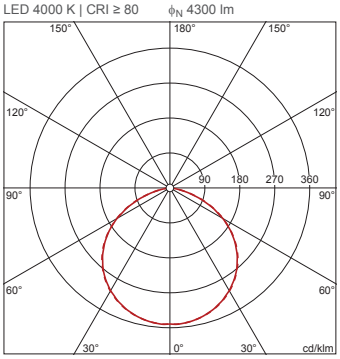

C 0/180 C 90/270

Siteco GmbH • Georg-Simon-Ohm-Str. 50 • 83301 Traunreut, Germany • Tel +49(8669)33-0 • Fax +49(8669)33-397 • eMail info@siteco.de • Internet www.siteco.com