siteco

Order No.: 5XA7682D2B1AC | **GTIN (EAN):** 4058352222652

Product description: FL20md,RS17,19540lm740,PlusDA,bracket

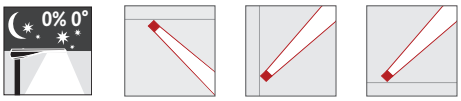

4058352222652
5XA7682D2B1AC
LED 4000K / CRI ≥ 70 ϕ_N 19540 lm

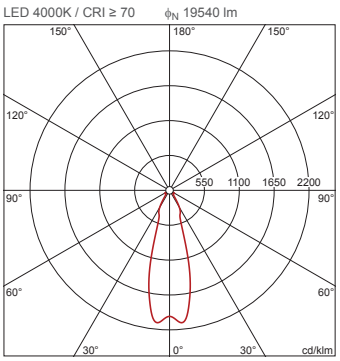

Floodlight FL 20 midi, floodlight, primary light control with lens, of plastic, primary optical cover: protective disc, of toughened safety glass, transparent, light distribution: RS17, light emission: direct distribution, primary light characteristic: rotationally symmetric, installation type: surface-mounted, LED, High Power LED, rated luminous flux: 19.540lm, luminous efficacy: 138lm/W, light colour: 740, colour temperature: 4000K, control gear: ECG Plus, control: flexible luminous flux parameterisation, time-dependent luminous flux control, digital communication interface, power reduction, overheat protection, electronic power reduction, with terminal, 5-pole, max. 2.5mm², mains connection: 220..240V, AC, 50/60Hz, rated input power: 142W, LED unit, of diecast aluminium, powder-coated, Siteco® metallic grey (DB 702S), corrosivity category C5 mid according to DIN EN ISO 12944, incl. 1x M20 cable gland for cable Ø 6.5..12mm, length: 654mm, width: 450mm, height: 76mm, housing frame, of diecast aluminium, powder-coated, Siteco® metallic grey (DB 702S), mounting bracket, of steel, powder-coated, Siteco® metallic grey (DB 702S), DALI, protection rating (complete): IP66, insulation class (complete): insulation class II (safety insulation), certification: CE, ENEC, VDE, protection symbol: D, permissible operating ambient temperature: -40..+40°C, permissible operating ambient temperature for outdoor applications: -40..+50°C, standard: DIN EN 12944, packaging unit: 1 piece

IP 66

Lamps:	LED
Wt. (kg):	13.9
GTIN (EAN):	4058352222652

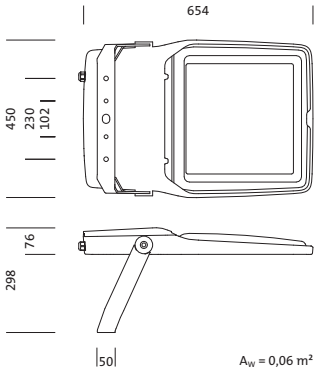

It is mandatory that the assembly instructions must be observed when planning and installing the electrical installation (to be found at www.siteco.com)
Tolerances related to thermal, electrical and photometric data according to IEC 62722
Issued 13.04.2024 - Modifications and errors subject to change - Ensure that you always use the latest version -

Siteco GmbH • Georg-Simon-Ohm-Str. 50 • 83301 Traunreut, Germany • Tel +49(8669)33-0 • Fax +49(8669)33-397 • eMail info@siteco.de • Internet www.siteco.com

siteco

Order No.: 5XA7682D2B1AC | **GTIN (EAN):** 4058352222652

Detailed technical description: FL20md,RS17,19540lm740,PlusDA,bracket

Key data
- Product type: floodlight
- Product name: Floodlight FL 20 midi
- Order No.: 5XA7682D2B1AC

Lighting technology | Lamps | Control gear

Component 1

Lighting technology:
- Light control: lens of plastic
- Cover: protective disc, transparent
- Light distribution: RS17
- Symmetry: rotationally symmetric
- Light emission: direct distribution

Lamps:
- Lamps: with High Power LED, LED
- Rated luminous flux: 19540lm
- Luminous efficacy: 138lm/W
- Colour temperature: 4000K
- Colour rendering index: CRI > 70
- Light colour: 740
- Rated input power: 142W

Operating device:
- Control gear: ECG Plus
- Control: Plus/DALI
- Equipment: overheat protection, power reduction, digital communication interface, time-dependent luminous flux control, flexible luminous flux parameterisation
- Switching method: electronic power reduction

Certificates, Standards
- Protection rating: IP66
- Insulation class: insulation class II (safety insulation)
- Protection symbol: D
- Temperature range (operation): -40..+40°C
- Standard: DIN EN 12944
- Corrosion protection: corrosivity category C5 mid according to DIN EN ISO 12944
- Certification, designation: CE, ENEC, VDE

Material, Colour
- LED unit: diecast aluminium, powder-coated, Siteco® metallic grey (DB 702S), incl. 1x M20 cable gland for cable Ø 6.5..12mm
- Colour specification: Siteco® metallic grey (DB 702S)
- housing frame: diecast aluminium, powder-coated, Siteco® metallic grey (DB 702S)
- Colour specification: Siteco® metallic grey (DB 702S)
- mounting bracket: steel, powder-coated, Siteco® metallic grey (DB 702S)
- Colour specification: Siteco® metallic grey (DB 702S)
- Cover: protective disc of toughened safety glass

Mounting
- Mounting method, mounting location: surface-mounted, to supporting structure, to the cross arm, to the wall
- Arrangement: single arrangement
- Supplement: with mounting bracket

Electrical connection
- Connection: terminal, 5-pole, max. 2.5mm²
- Nominal voltage: 220..240V, 50/60Hz, AC
- Surge voltage resistance: 10kV 1.2/50µs

Dimensions, Weight
- Length: 654mm
- Width: 450mm
- Height: 76mm
- Weight: 13.9kg

Light emission
- Light emission: 0% at 0° inclination

Service life
- Rated service life: 100000h (L97/B10) at AT = 25°C, 50000h (L98/B10) at AT = 25°C

It is mandatory that the assembly instructions must be observed when planning and installing the electrical installation (to be found at www.siteco.com)
Tolerances related to thermal, electrical and photometric data according to IEC 62722
Issued 13.04.2024 - Modifications and errors subject to change - Ensure that you always use the latest version -

Siteco GmbH • Georg-Simon-Ohm-Str. 50 • 83301 Traunreut, Germany • Tel +49(8669)33-0 • Fax +49(8669)33-397 • eMail info@siteco.de • Internet www.siteco.com

siteco

Order No.: 5XA7682D2B1AC | **GTIN (EAN):** 4058352222652

Dimensions: FL20md,RS17,19540lm740,PlusDA,bracket

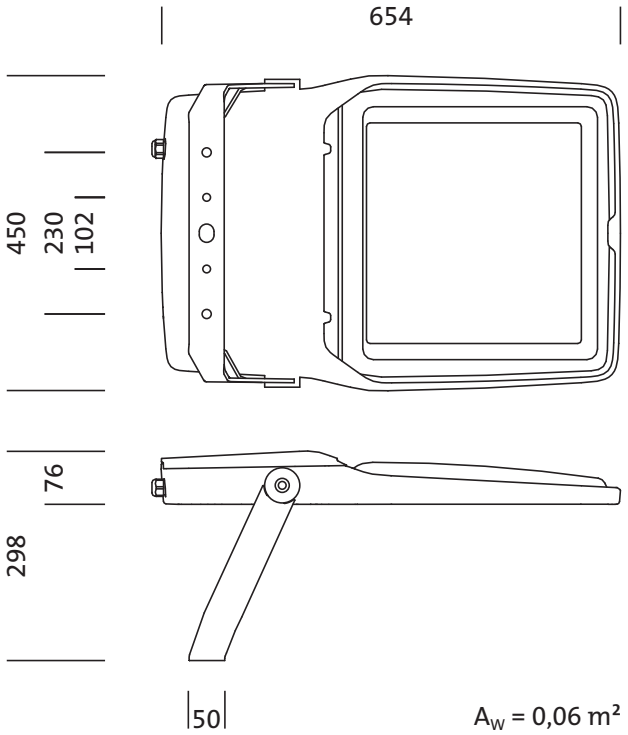

It is mandatory that the assembly instructions must be observed when planning and installing the electrical installation (to be found at www.siteco.com)
Tolerances related to thermal, electrical and photometric data according to IEC 62722
Issued 13.04.2024 - Modifications and errors subject to change - Ensure that you always use the latest version -

Siteco GmbH • Georg-Simon-Ohm-Str. 50 • 83301 Traunreut, Germany • Tel +49(8669)33-0 • Fax +49(8669)33-397 • eMail info@siteco.de • Internet www.siteco.com

siteco

Order No.: 5XA7682D2B1AC | **GTIN (EAN):** 4058352222652

Planning data: FL20md,RS17,19540lm740,PlusDA,bracket

5XA7682D2B1AC: 1x LED
4000K / CRI ≥ 70

4058352222652
5XA7682D2B1AC
LED 4000K / CRI ≥ 70 ϕ_N 19540 lm

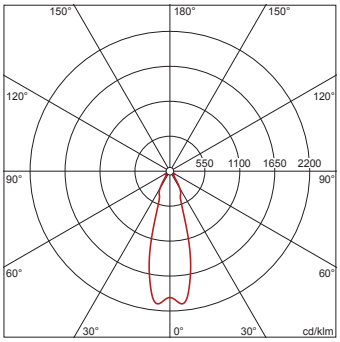

C 0/180 C 90/270

Luminous intensity class according to
EN13201-2: G6

H(m)	ø(m)	Emax(lx)	Em(lx)
4	2.25	2524	2091
6	3.37	1122	930
8	4.50	631	523
10	5.62	404	335
12	6.75	280	232

It is mandatory that the assembly instructions must be observed when planning and installing the electrical installation (to be found at www.siteco.com)
Tolerances related to thermal, electrical and photometric data according to IEC 62722
Issued 13.04.2024 - Modifications and errors subject to change - Ensure that you always use the latest version -

Siteco GmbH • Georg-Simon-Ohm-Str. 50 • 83301 Traunreut, Germany • Tel +49(8669)33-0 • Fax +49(8669)33-397 • eMail info@siteco.de • Internet www.siteco.com