siteco

Order No.: 5XA7571C2K23 | **GTIN (EAN):** 4058352624647

Product description: SiC31mn,PL32,15000lm740,0/1

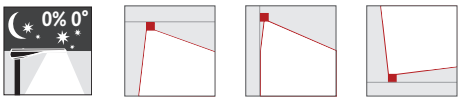

SiCompact® 31 mini, floodlight, primary light control with lens, of plastic, of toughened safety glass, transparent, light distribution: PL32, light emission: direct distribution, primary light characteristic: asymmetric, installation type: surface-mounted, LED, High Power LED, rated luminous flux: 15.000lm, luminous efficacy: 158lm/W, light colour: 740, colour temperature: 4000K, control gear: ON/OFF, with cable, 3x 1.5mm², mains connection: 220..240V, AC, 50/60Hz, connection cable pre-assembled, cable length: 2m, rated input power: 95W, of diecast aluminium, specular, metallic grey (RAL 9006), length: 461mm, width: 261mm, height: 62mm, bracket, of sheet steel, coated, metallic grey (RAL 9006), ON/OFF, protection rating (complete): IP66, insulation class (complete): insulation class I (protective earthing), certification: CE, ENEC, impact resistance: IK08, permissible operating ambient temperature: -40..+45°C, packaging unit: 1 piece

IP 66 IK 08

Lamps:	LED
Wt. (kg):	5.6
GTIN (EAN):	4058352624647

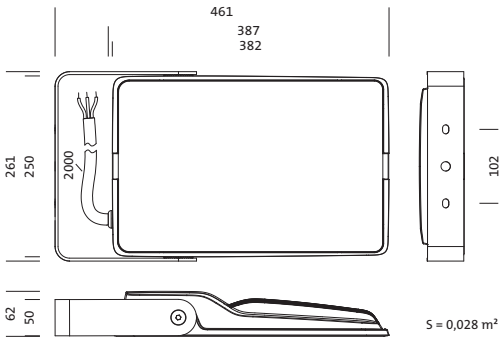

It is mandatory that the assembly instructions must be observed when planning and installing the electrical installation (to be found at www.siteco.com)
Tolerances related to thermal, electrical and photometric data according to IEC 62722
Issued 27.09.2024 - Modifications and errors subject to change - Ensure that you always use the latest version -

Siteco GmbH • Georg-Simon-Ohm-Str. 50 • 83301 Traunreut, Germany • Tel +49(8669)33-0 • Fax +49(8669)33-397 • eMail info@siteco.de • Internet www.siteco.com

siteco

Order No.: 5XA7571C2K23 | **GTIN (EAN):** 4058352624647

Detailed technical description: SiC31mn,PL32,15000lm740,0/1

Key data
- Product type: floodlight
- Product name: SiCompact® 31 mini
- Order No.: 5XA7571C2K23

Lighting technology | Lamps | Control gear

Component 1

Lighting technology:
- Light control: lens of plastic
- Light distribution: PL32
- Symmetry: asymmetric distribution
- Light emission: direct distribution

Lamps:
- Lamps: with High Power LED, LED
- Rated luminous flux: 15000lm
- Luminous efficacy: 158lm/W
- Colour temperature: 4000K
- Colour rendering index: CRI > 70
- Light colour: 740
- Rated input power: 95W

Operating device:
- Control gear: ECG
- Control: ON/OFF

Certificates, Standards
- Protection rating: IP66
- Insulation class: insulation class I (protective earthing)
- Impact resistance: IK08
- Temperature range (operation): -40..+45°C
- Certification, designation: CE, ENEC

Material, Colour
- Colour specification: metallic grey (RAL 9006)
- bracket: sheet steel, coated, metallic grey (RAL 9006)
- Colour specification: metallic grey (RAL 9006)

Mounting
- Mounting method, mounting location: surface-mounted, to supporting structure, to the cross arm, to the wall
- Arrangement: single arrangement
- Supplement: with mounting bracket

Electrical connection
- Connection: cable, 3x 1.5mm²
- Nominal voltage: 220..240V, 50/60Hz, AC
- Surge voltage resistance: 10kV 1.2/50µs
- Connection cable: pre-assembled, L= 2m

Dimensions, Weight
- Length: 461mm
- Width: 261mm
- Height: 62mm
- Weight: 5.6kg

Light emission
- Light emission: 0% at 0° inclination

Service life
- Rated service life: 100000h (L80/B50) at AT = 25°C

It is mandatory that the assembly instructions must be observed when planning and installing the electrical installation (to be found at www.siteco.com)
Tolerances related to thermal, electrical and photometric data according to IEC 62722
Issued 27.09.2024 - Modifications and errors subject to change - Ensure that you always use the latest version -

Siteco GmbH • Georg-Simon-Ohm-Str. 50 • 83301 Traunreut, Germany • Tel +49(8669)33-0 • Fax +49(8669)33-397 • eMail info@siteco.de • Internet www.siteco.com

siteco

Order No.: 5XA7571C2K23 | **GTIN (EAN):** 4058352624647

Dimensions: SiC31mn,PL32,15000lm740,0/1

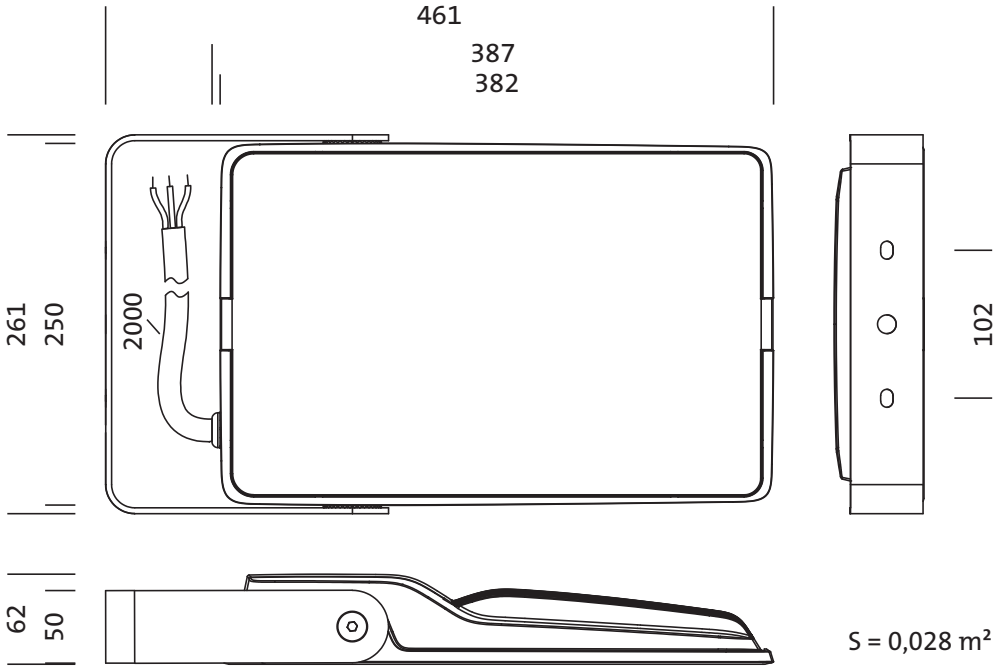

It is mandatory that the assembly instructions must be observed when planning and installing the electrical installation (to be found at www.siteco.com)
Tolerances related to thermal, electrical and photometric data according to IEC 62722
Issued 27.09.2024 - Modifications and errors subject to change - Ensure that you always use the latest version -

Siteco GmbH • Georg-Simon-Ohm-Str. 50 • 83301 Traunreut, Germany • Tel +49(8669)33-0 • Fax +49(8669)33-397 • eMail info@siteco.de • Internet www.siteco.com